Install Guide

CH53-E CH63-E

Four-Camera Multisensor

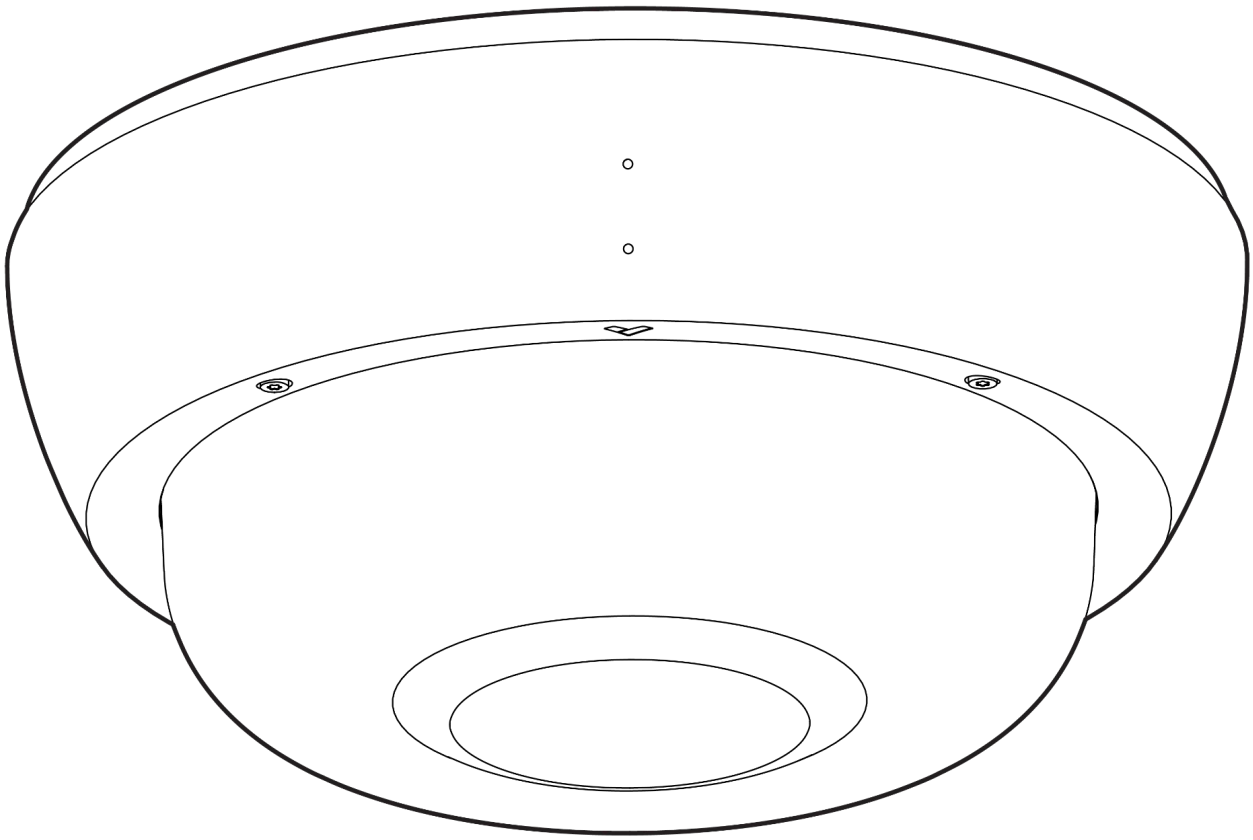

Document

Document Details

Version

V1.4 20260203
(V1.0 published 20250922)

Firmware

Firmware version can be verified on Verkada Command
command.verkada.com.

Product Models

This install guide pertains to models:

CH53-E

- CH53-1TBE-HW
- CH53-2TBE-HW
- CH53-3TBE-HW
- CH53-4TBE-HW
- CH53-8TBE-HW

CH63-E

- CH63-2TBE-HW
- CH63-4TBE-HW
- CH63-6TBE-HW
- CH63-8TBE-HW

CH53-E-F

- CH53-1TBE-HW-F
- CH53-2TBE-HW-F
- CH53-3TBE-HW-F
- CH53-4TBE-HW-F
- CH53-8TBE-HW-F

CH63-E-F

- CH63-2TBE-HW-F
- CH63-4TBE-HW-F
- CH63-6TBE-HW-F
- CH63-8TBE-HW-F

HEVC Advance™
Covered by patents at patentlist.accessadvance.com

© Copyright 2026 Verkada Inc. All rights reserved.

Verkada and the Verkada logo are registered trademarks or service marks of Verkada Inc. ("Verkada"). All other trademarks are the property of their respective owners.

Verkada may make changes to this document at any time without notice. The information presented herein may be inaccurate or outdated, and Verkada is under no obligation to maintain it. ALL INFORMATION IS PROVIDED "AS-IS" AND WITHOUT ANY WARRANTIES, IMPLIED, EXPRESS, OR OTHERWISE. VERKADA DISCLAIMS LIABILITY FOR ALL DAMAGES, INCLUDING WITHOUT LIMITATION ANY DIRECT, INDIRECT, SPECIAL, INCIDENTAL, PUNITIVE, OR CONSEQUENTIAL DAMAGES, ARISING OUT OF USE OF THIS DOCUMENT.

Any intellectual property rights relating to Verkada products are and shall remain Verkada's exclusive property. Use of any Verkada product is subject to Verkada's end user agreement or other executed agreement with Verkada. No license, either expressed or implied, to use or distribute any Verkada product is granted under this document.

This document may not be sold, resold, licensed or sublicensed and may not be transferred without Verkada's prior written consent. No part of this document may be reproduced in whole or in part without the express written consent of Verkada.

What's in the Box

Four-Camera Multisensor

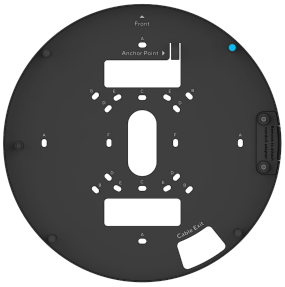

Mount Plate

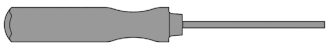

T10 Torx Security Screwdriver

Wall Mount Screws (4 pcs)
Length: 30mm **Diameter:** 5mm
Drive: #2 Phillips

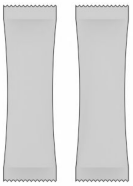

Desiccants (2 pc)

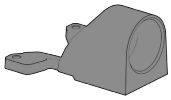

Conduit Adapter

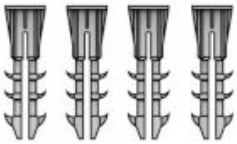

Wall Anchors (4 pcs)

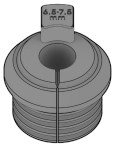

Cable Gland (1 pc)
Size: 6.5-7.5mm

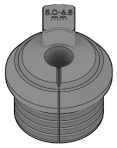

Cable Gland (1 pc)
Size: 5.0-6.5mm
(Attached to camera)

What you'll need

- A working internet connection.
- 802.3bt Power over Ethernet (PoE) switch or a PoE injector.
- A smartphone or laptop
- A #2 Phillips screwdriver or power drill with a #2 Phillips driver bit
- 9/32 inch (7mm) drill bit for wall anchors (if using mount plate)
- 1/8 inch (3mm) drill bit for pilot holes (if using mount plate)
- A Cat5 or Cat6 Ethernet cable with a 0.2-0.3 inch diameter (5 -7.5mm)

Connect

For easy registration and setup, scan the QR code on the product.

If you prefer to manually register your product, please proceed to: verkada.com/start

Overview

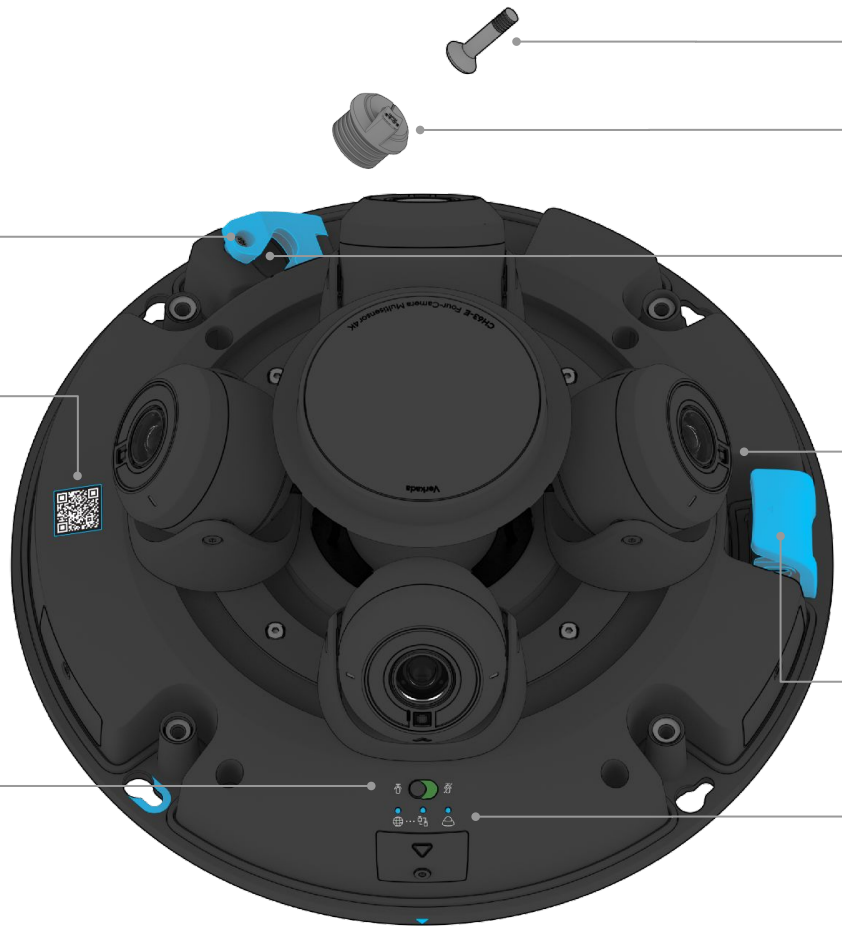

Mount Plate

- **A** Wall Mount
- **B** 4” Square Junction Box
- **C** Single Gang Junction Box
- **D** 3.5” Round Junction Box
- **E** Double Gang Junction Box
- **F** European Junction Box

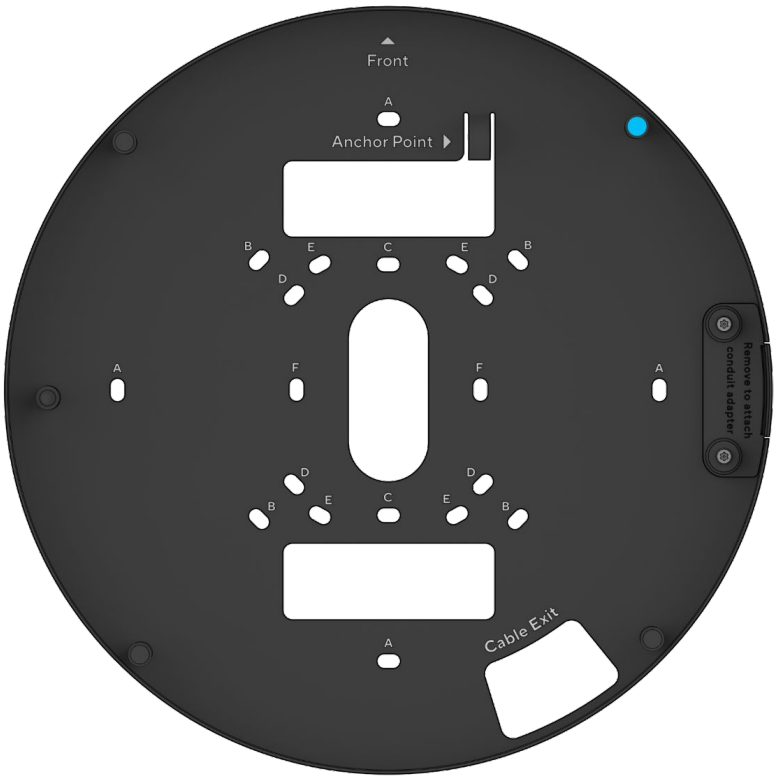

Exterior LED Behavior

General operation

- **Solid Blue**
  Camera is running, connected, and recording data.
- **Solid Orange**
  Camera is on and booting up.
- **Flashing Orange**
  Camera is updating firmware.
- **Flashing Red**
  Specific error, see “Network errors” below.
- **Solid Red**
  Contact support.

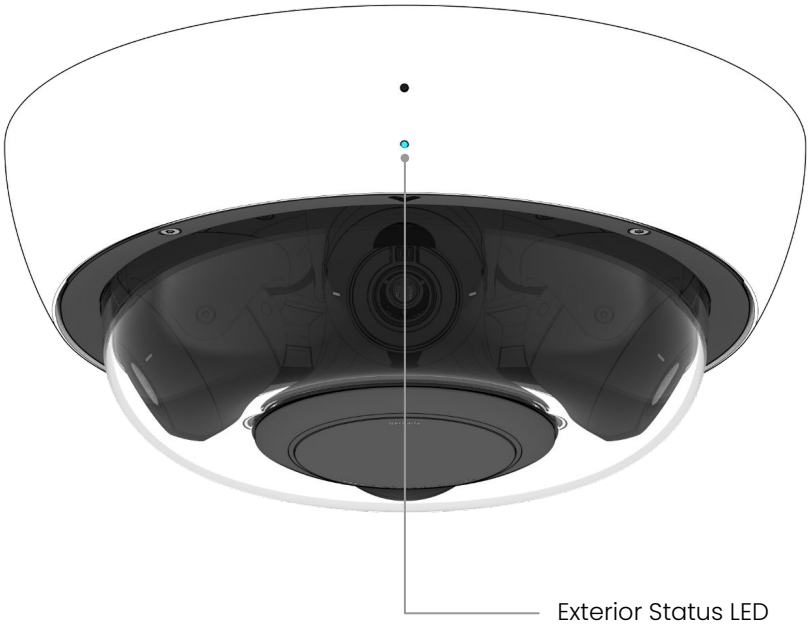

Network errors

When the camera top cover is on, an error will be communicated through the outer Status LED, which will flash a specific number of times depending on the error state.

Example of **5 Red** flashes on Outer Status LED

1 Red - No IP Address
Camera has not received an IP address.

2 Red - Duplicate IP
Camera has detected duplicate IP addresses on the LAN.

3 Red - No Gateway
Camera is not able reach the configured Gateway.

4 Red - No Switch
Camera is connected with PoE, but unable to connect to the Switch.

5 Red - DNS error
Camera is not able to resolve Verkada hostnames.

6 Red - NTP Error
Camera is not able to receive a response from the NTP Server.

7 Red - Not Connected to Command
Verkada endpoints are not reachable after boot up.

Interior LED Behavior

General operation

- **Solid Blue**
  Camera is running, connected, and recording data.
- **Solid Orange**
  Camera is on and booting up.
- **Flashing Orange**
  Camera is updating firmware.
- **Flashing Red**
  Specific error, see “Network errors” below.
- **Solid Red** (x3)
  Contact support

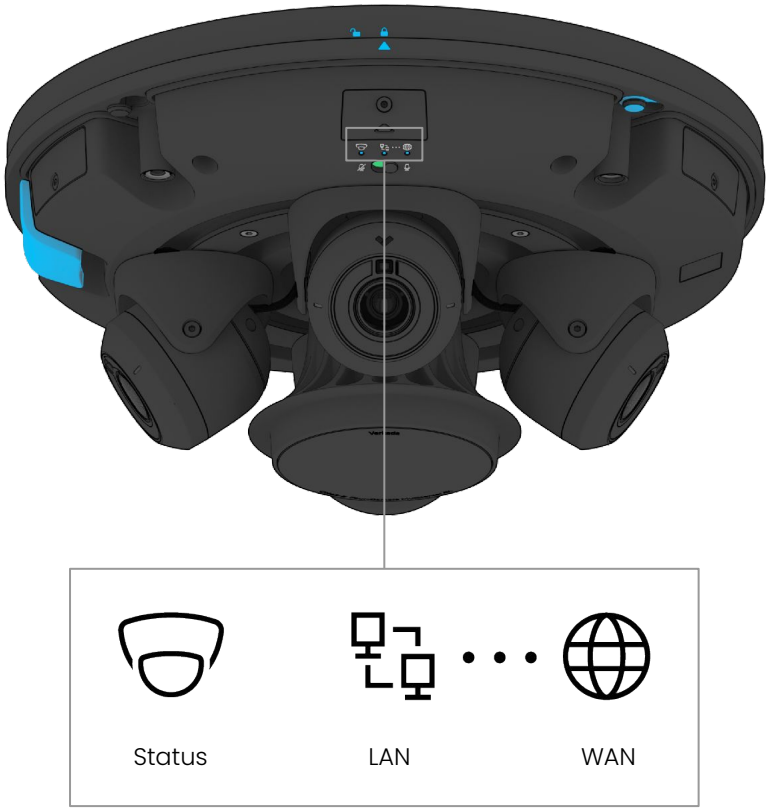

Example of **2 Red** flashes on LAN Debug LED

Network errors (Interior ‘Debug’ LEDs)

When the camera top cover is removed, the specific error will be communicated locally on the LAN or WAN debug LED, while the device Status LED will show solid red.

LAN errors

1 Red - No IP Address
Camera has not received an IP address.

2 Red - Duplicate IP
Camera has detected duplicate IP addresses on the LAN.

3 Red - No Gateway
Camera is not able reach the configured Gateway.

4 Red - No Switch
Camera is connected with PoE, but unable to connect to the Switch.

WAN errors

1 Red - DNS error
Camera is not able to resolve Verkada hostnames.

2 Red - NTP Error
Camera is not able to receive a response from the NTP Server.

3 Red - Not Connected to Command
Verkada endpoints are not reachable after boot up.

Microphone Switch

The microphone switch allows you to physically disconnect the microphone in the camera unit, guaranteeing that no audio will be recorded.

Camera Audio is enabled by default.

To disable Camera Audio, move the switch into the left position.

Alternatively, Camera Audio can be disabled in your Command account.

Microphone Enabled

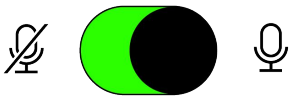

Microphone Disabled

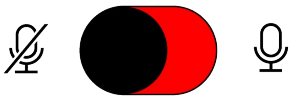

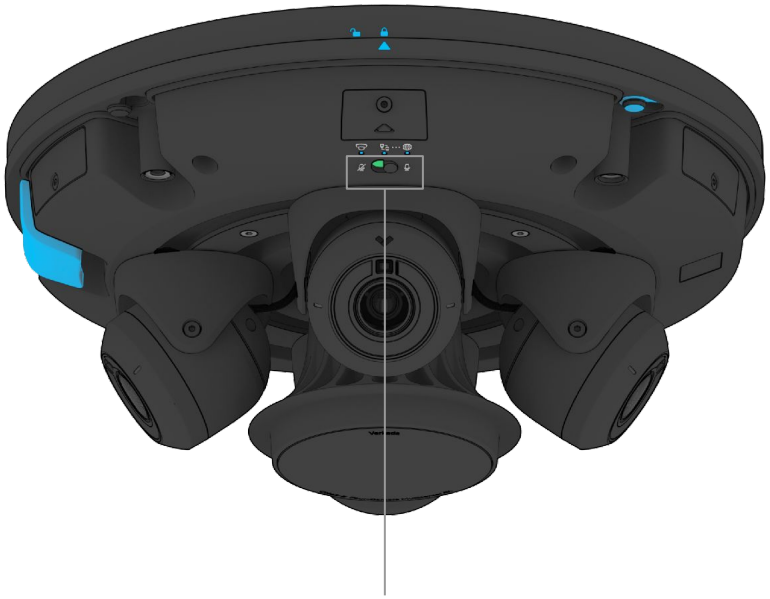

Placement

For best night vision, install as high as possible.

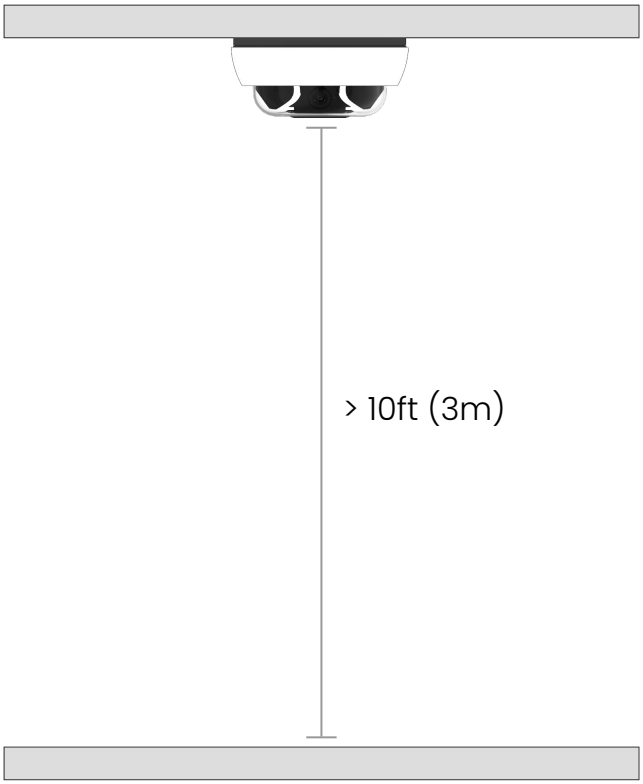

Preparation

Connect Device

Note: This step can be done after mounting, although registering the product first will ensure it is in working order prior to mounting.

Connect the camera to your network using the Ethernet port located behind the cable door on the device.

For easy registration and setup, scan the QR code on the product.

If you prefer to manually register your product, please proceed to: verkada.com/start

Enter the serial number printed on the back of the device, the packaging, or the order number.

Camera Preparation 1/3

Note: To ensure the clear bubble is not damaged, keep the protective film on the camera until the installation is completed.

Unscrew the four T10 Torx security screws on the top cover.

Lift the top cover and set it aside. Be careful to not scratch the clear bubble.

Camera Preparation 2/3

Rotate the camera counter-clockwise while the release button is pressed to disconnect it from the mount plate.

Lift the camera off of the mount plate.

Set the mount plate aside.

Camera Preparation 3/3

Remove and discard both desiccants adhered to the camera base.

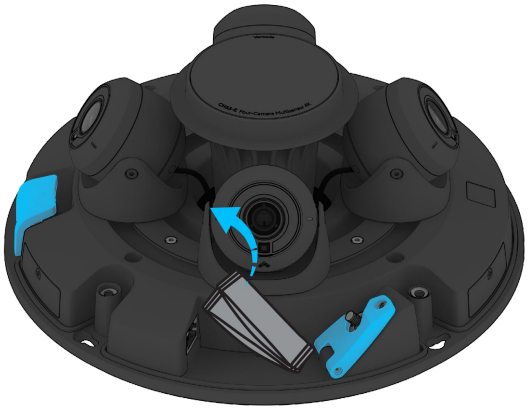

Loosen the screw on the cable latch, using the T10 Torx Security Screwdriver.

Open the cable latch.

Remove the cable gland and set it aside.

Set the camera aside.

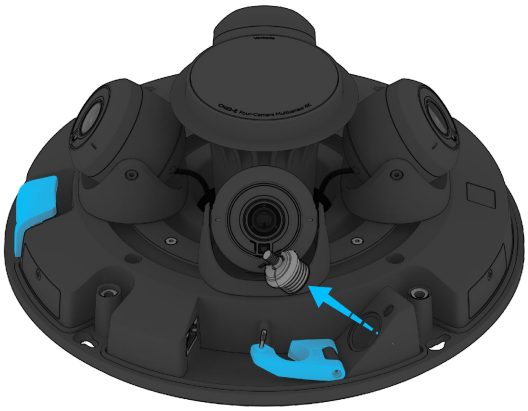

Mounting 1/8

Use the mount plate as a template.

For ceiling mounting, mark mounting pattern “A” and the cutout for the cable exit.

Drill 1/8 inch (3mm) pilot holes.

If using wall anchors, drill 9/32 inch (7mm) holes.

For a junction box mount, refer to the *Overview* section to use the appropriate hole pattern for mounting.

For a solid material like wood or metal, make sure the material can support at least 16 lbs (7 kg) of weight.

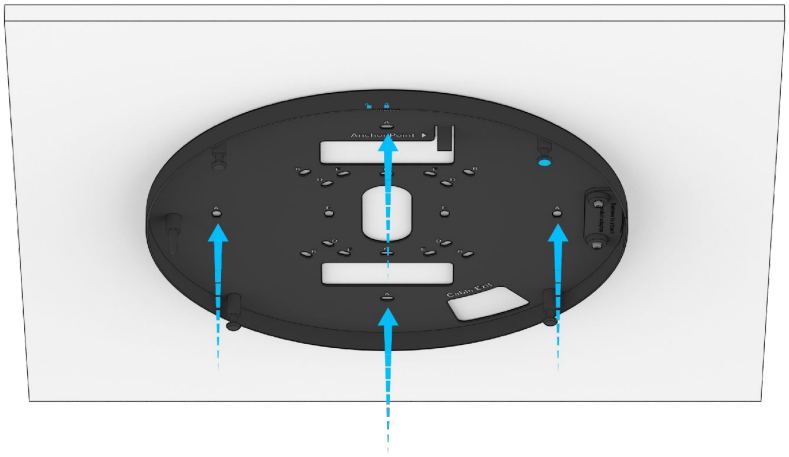

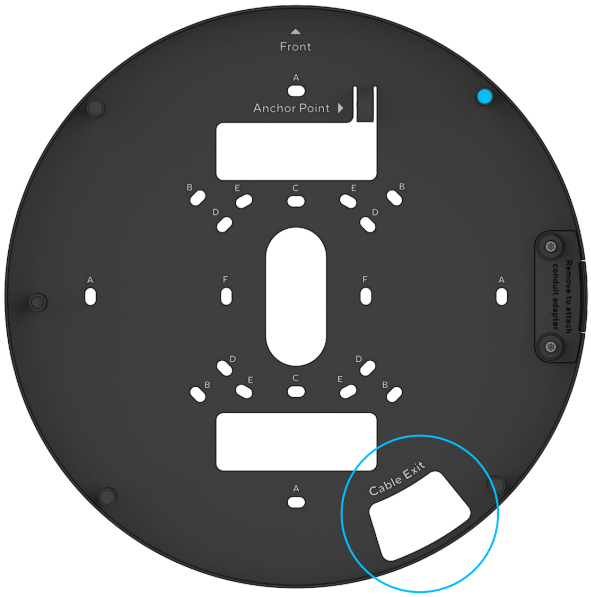

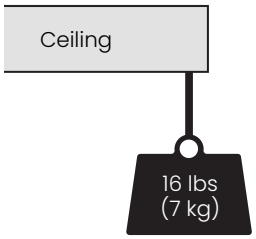

Drill a 3/4 inch (20mm) cutout for the Ethernet cable.

Lead the Ethernet cable through the cable exit on the mount plate.

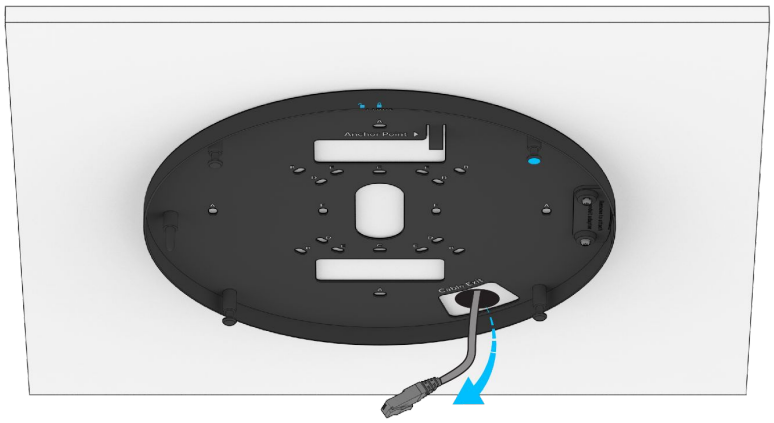

Mounting 2/8

Attach the security leash to the anchor point on the mount plate.

Open the latch and lead the Ethernet cable through.

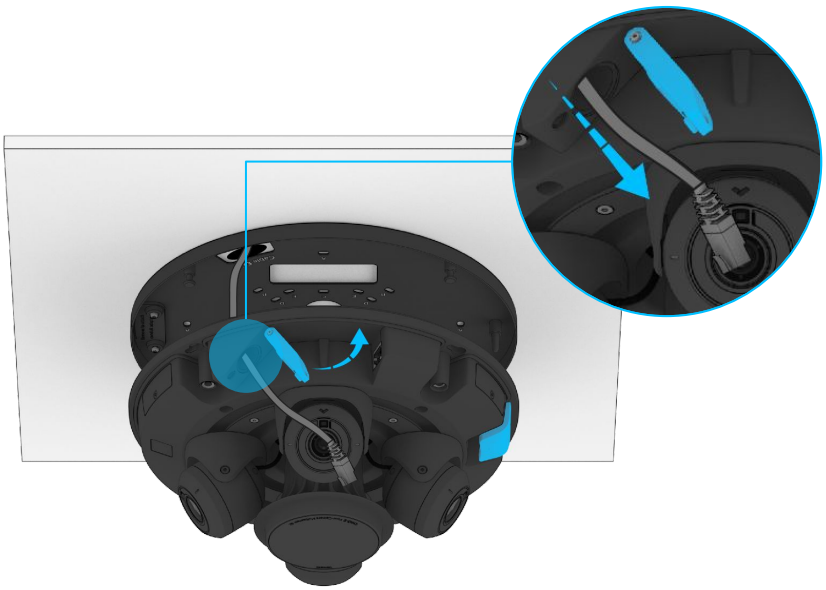

Mounting 3/8

Align the blue hole on the camera to the blue t-post on the mount plate.

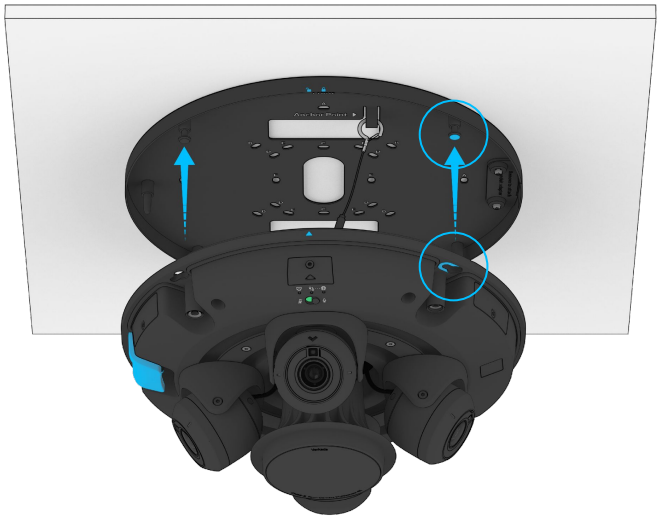

To secure the camera to the mount plate, rotate the camera clockwise.

The camera is secured when you hear a click and the blue arrow is pointing towards the locked position.

Mounting 4/8

Lead the Ethernet cable though the cable gland hole and latch.

Select the appropriate sized cable gland and wrap it around the Ethernet cable.

Connect the Ethernet cable to the camera.

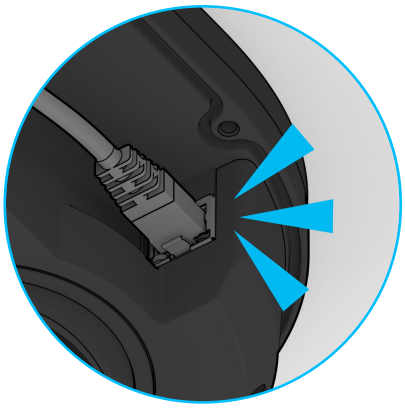

Press the cable gland into the cable gland hole.

In case of cable slack, press the excess Ethernet cable into the cable gland.

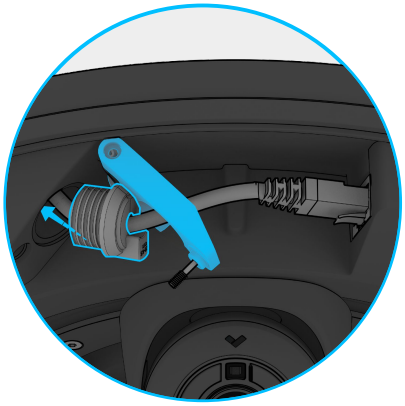

Ensure that the cable gland is firmly in place with no gap or unevenness.

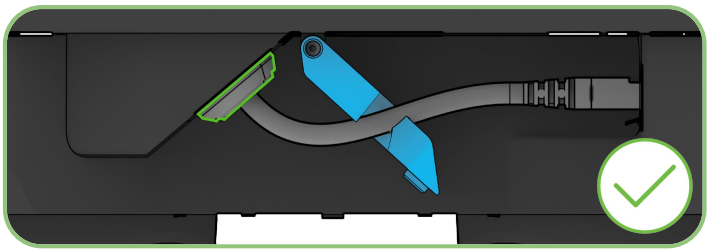

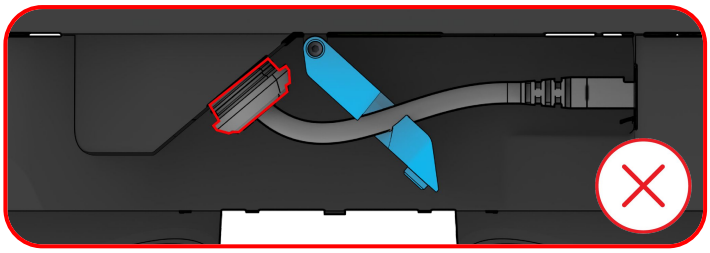

Mounting 5/8

Align the protrusion on the grommet with the slot on the latch. Incorrect installation may result in water ingress that could damage the device.

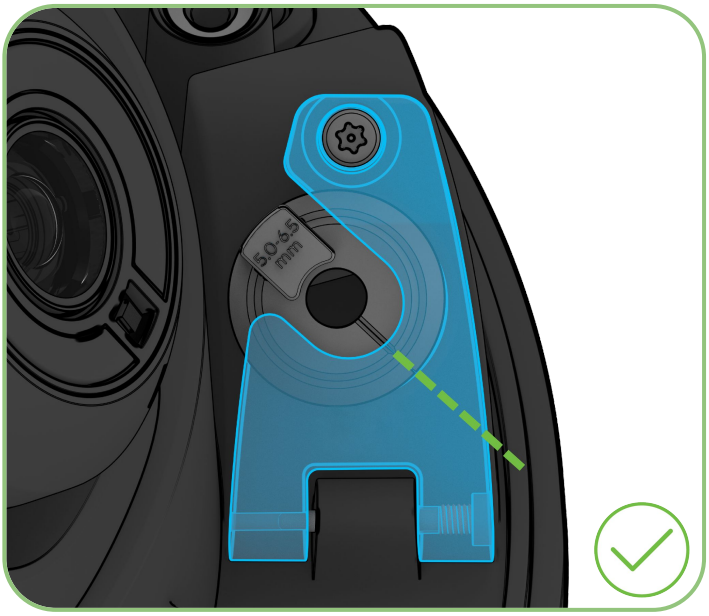

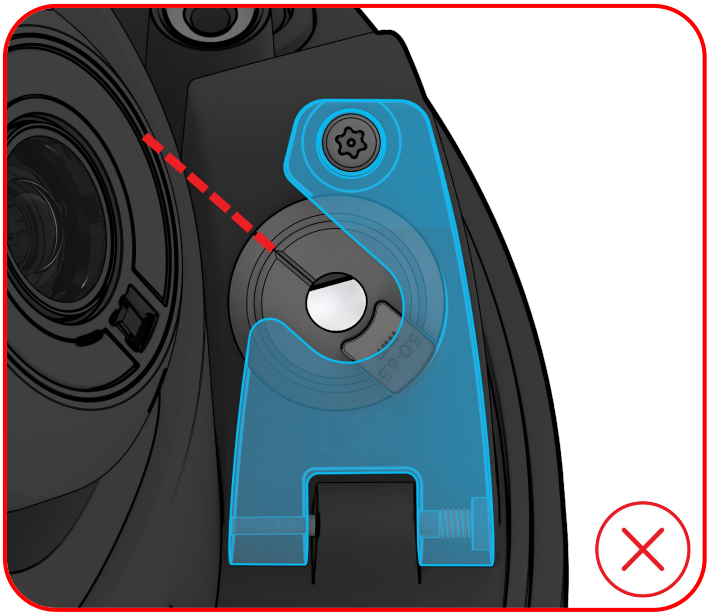

Ensure the latch is fully down and closed before tightening the security screw.

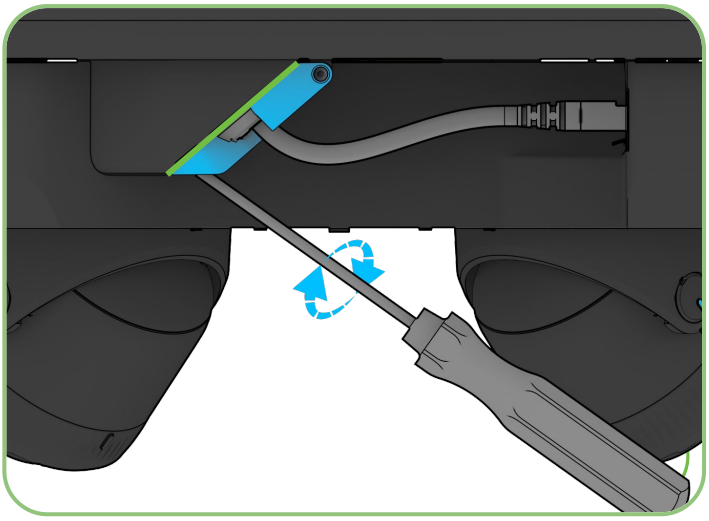

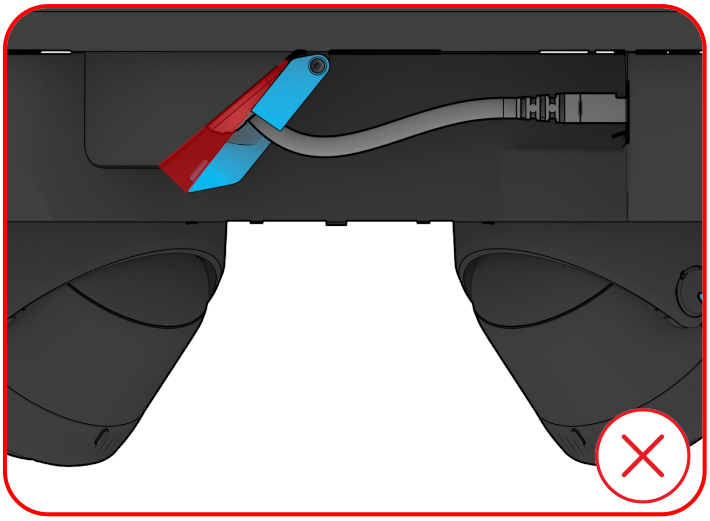

Mounting 6/8

Adjust the camera to the desired viewing angle and rotation.

View the camera feed through Command to get an accurate idea of the orientation and the field of view.

Note: Image can also be rotated 90˚, 180˚, 270˚ in Command.

Each individual camera can be positioned 180˚ in each direction, from its original position. Cameras can be grouped together to fulfill specific user needs.

Pan

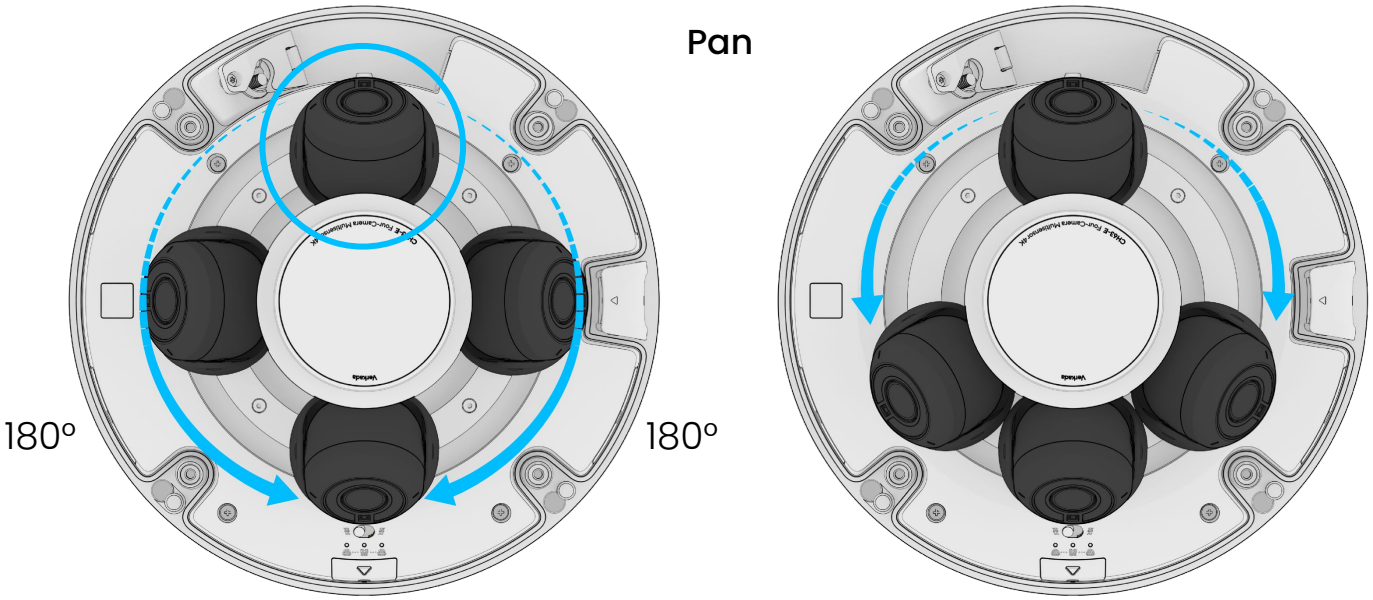

Tilt

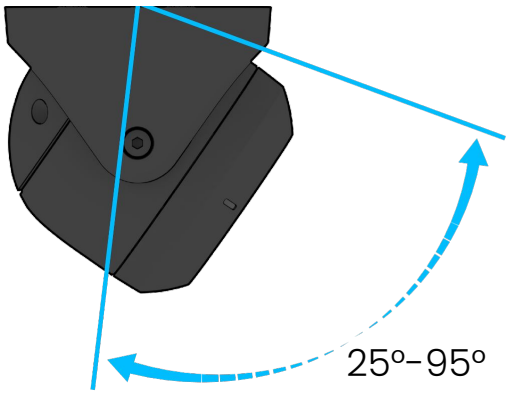

Rotate

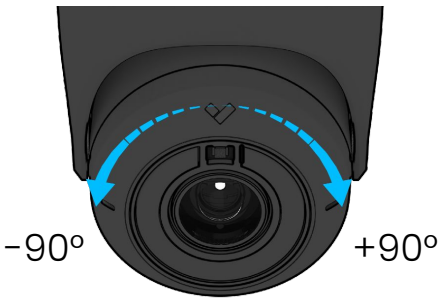

Mounting 7/8

Open and remove the desiccants from their outer pouches.

Peel the backing from the double-sided tape.

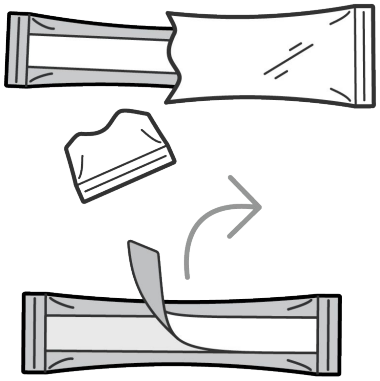

Place the desiccants on the top cover where it says **"Place Desiccant Here"**.

Mounting 8/8

Install the top cover to the camera by aligning the external LED hole with the internal LEDs.

Hold the top cover firmly in place, and tighten the four T10 Torx Security Screws.

Remove the plastic films from the clear bubble and IR cover.

Compliance

Caution	1. Maintenance and repair work must always be carried out by qualified technical personnel. Disconnect power from the unit when performing a maintenance task. 2. Wiring methods used for the connection of the equipment to earth shall be in accordance with the National Electrical Code, ANSI/NFPA 70, and the Canadian Electrical Code, Part 1, CSA C22.1. 3. The product must be installed and protected in a location that is not easily accessible and is away from impacts or heavy vibration. 4. The device is only to be connected to PoE networks without routing to outside plants. 5. If powered by a power adapter, the adapter should be properly grounded. 6. Please contact certified dealers for power adapters.
FCC Compliance	This device complies with part 15 of the FCC Rules. Operation is subject to the following two conditions: (1) This device may not cause harmful interference, and (2) this device must accept any interference received, including interference that may cause undesired operation. NOTE: This equipment has been tested and found to comply with the limits for a Class A digital device, pursuant to part 15 of the FCC Rules. These limits are designed to provide reasonable protection against harmful interference when the equipment is operated in a commercial environment. This equipment generates, uses, and can radiate radio frequency energy and, if not installed and used in accordance with the instruction manual, may cause harmful interference to radio communications. Operation of this equipment in a residential area is likely to cause harmful interference in which case the user will be required to correct the interference at his own expense.
IC Statement	This device complies with ISED's licence-exempt RSSs. Operation is subject to the following two conditions: (1) This device may not cause harmful interference, and (2) this device must accept any interference received, including interference that may cause undesired operation. Le présent appareil est conforme aux CNR d' ISED applicables aux appareils radio exempts de licence. L'exploitation est autorisée aux deux conditions suivantes : (1) le dispositif ne doit pas produire de brouillage préjudiciable, et (2) ce dispositif doit accepter tout brouillage reçu, y compris un brouillage susceptible de provoquer un fonctionnement indésirable.
South Africa Compliance*	ICASA TE-2025/0423 APPROVED *Only applicable to the following models: - CH53-1TBE-HW - CH53-2TBE-HW - CH53-4TBE-HW - CH53-8TBE-HW

Support

Thank you for purchasing this Verkada product. If for any reason you're experiencing issues or need assistance, please contact our 24/7 Technical Support Team immediately.

Sincerely,
The Verkada Team
verkada.com/support