Install Guide

A**C42** Door Controller

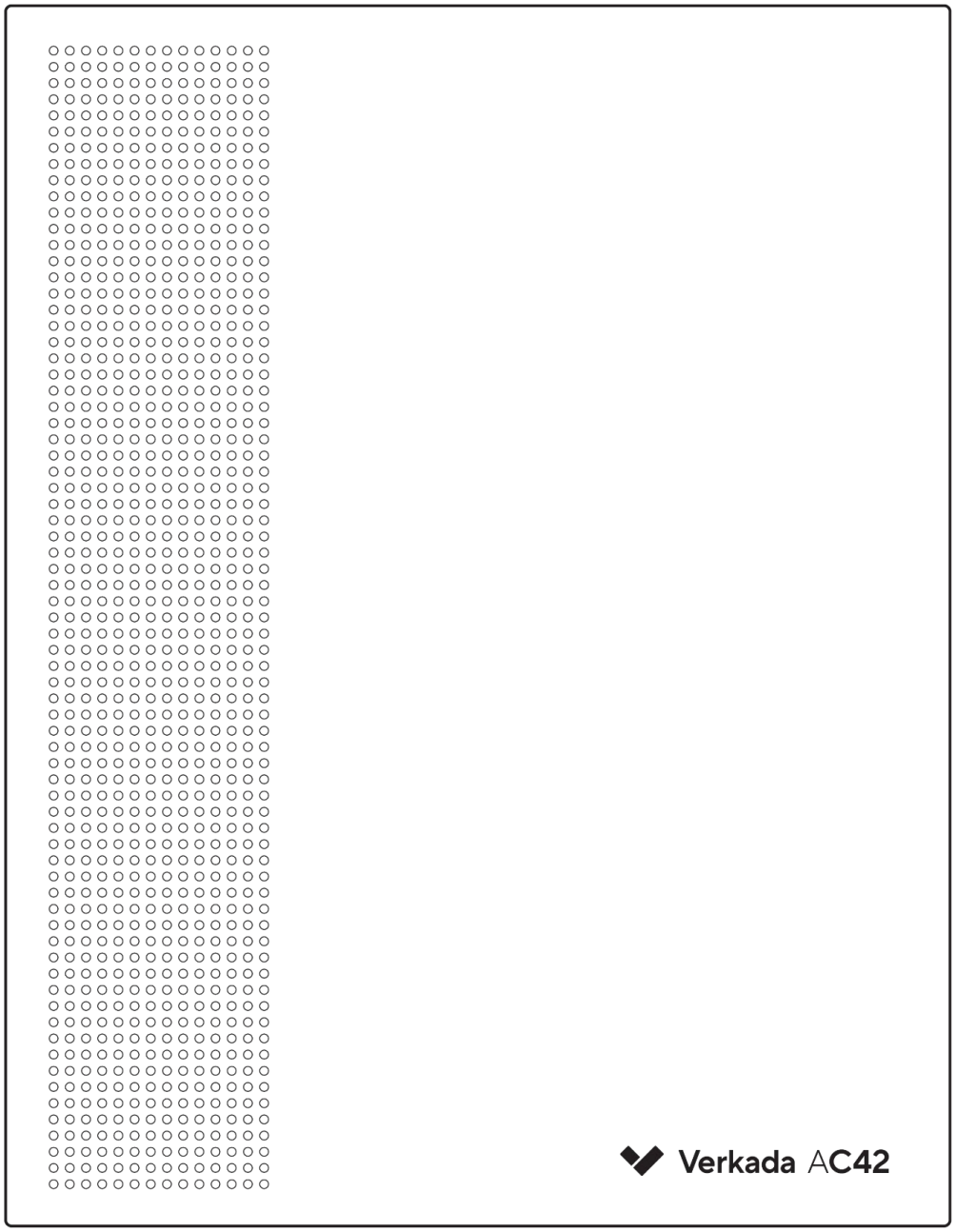

Verkada Inc. 406 E 3rd Ave, San Mateo, CA 94401
sales@verkada.com

All specifications are subject to change without notice
Copyright © 2023 Verkada Inc. All rights reserved.

Document Details

V1.5 (20260203)

(V1.0 first published 20230111)

Firmware

Firmware version can be verified on
Verkada Command command.verkada.com.

Levels of Access Control

- Attack Level/Grade: Level 1
- Endurance Level/Grade: Level 1
- Line Security Level/Grade: Level 1
- Standby Power Level/Grade: Level 1

UL294 Performance Levels

- Attack Level: Level I
- Endurance Level: Level I
- Line Security Level: Level I
- Standby Power Level: Level I

CAN/ULC-60839-11-1

- Grade assignment: Grade I

Caution

Installation and/or maintenance of this product shall be performed by trained professionals only.

Verkada Inc. 406 E 3rd Ave, San Mateo, CA 94401
sales@verkada.com

All specifications are subject to change without notice
Copyright © 2023 Verkada Inc. All rights reserved.

What's in the box

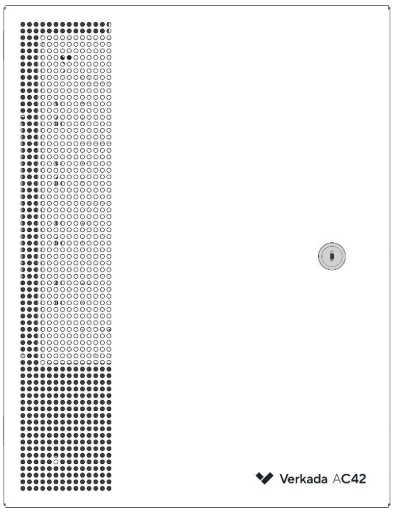

AC42 Door Controller

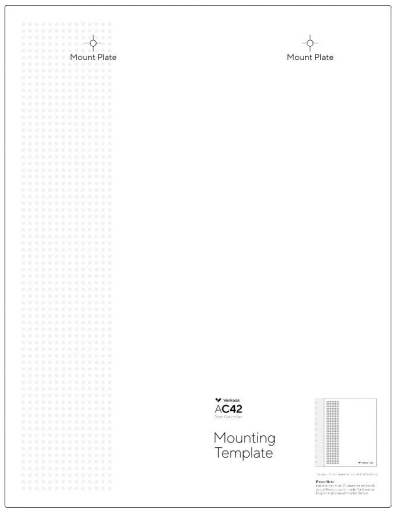

Mount Template

Mount Plate

AC Cable

Screwdriver

Plywood Screws
4 pcs

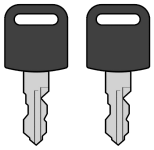

Keys
2 pcs

What you'll need

- A working internet connection
- A smartphone or laptop
- A #2 Phillips head and power drill
- A level

Connect

Connect the AC42 to your network using the Ethernet port located at the bottom of the controller. Connect the AC42 power supply into your power outlet.

Supports 100- 240VAC (50/60Hz).

After connecting the AC42 to network and power, visit: verkada.com/start

For detailed installation instructions, visit: verkada.com/support

Verkada Inc. 406 E 3rd Ave, San Mateo, CA 94401
sales@verkada.com

All specifications are subject to change without notice
Copyright © 2023 Verkada Inc. All rights reserved.

Overview 1/2

Status LED Behavior

Solid Orange
Controller is on and booting up

Flashing Orange
Controller is updating firmware

Flashing Blue
Controller is managing doors, but cannot reach the server

Solid Blue
Controller is managing doors and connected to the server

Flashing Pink
Identify

Other LED Behavior

Door: On
Door unlocked

AUX Out: On
Relay in triggered state

REX / DPI / AUX In: On
Circuit closed

FAI: On
FAI in triggered state

Verkada Inc. 406 E 3rd Ave, San Mateo, CA 94401
sales@verkada.com

All specifications are subject to change without notice
Copyright © 2023 Verkada Inc. All rights reserved.

Overview 2/2

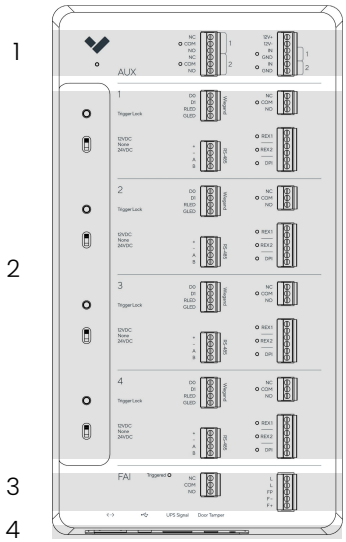

Controller highlights

1 Ports for: AUX.
2 Ports for: Doors 1 to 4. All door ports function the same.
3 Ports for: Fire Alarm Interface(FAI).
4 Ports for: Ethernet, USB, UPS, Door Tamper.

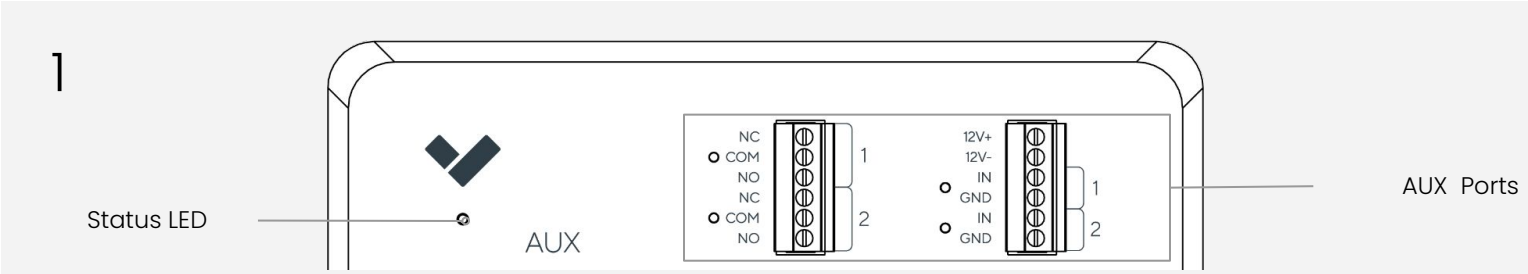

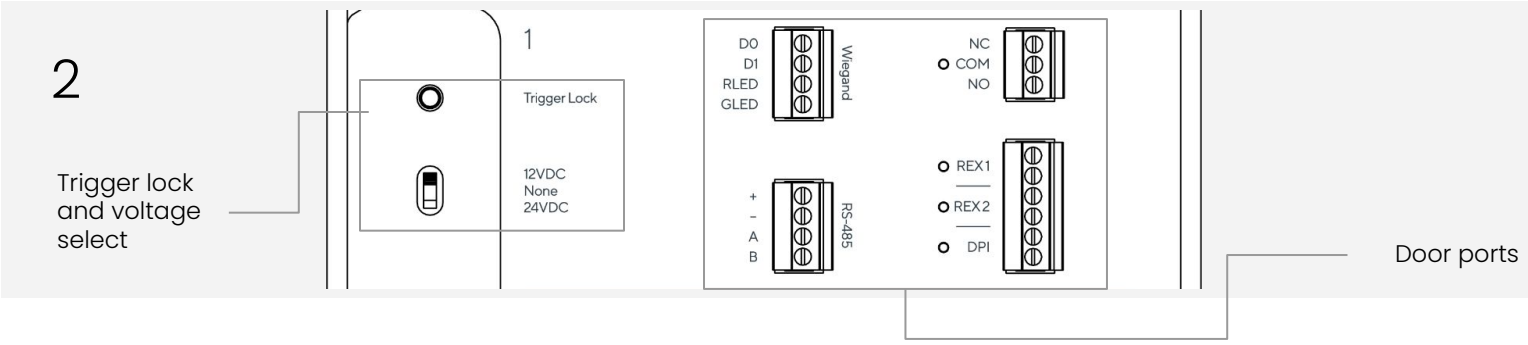

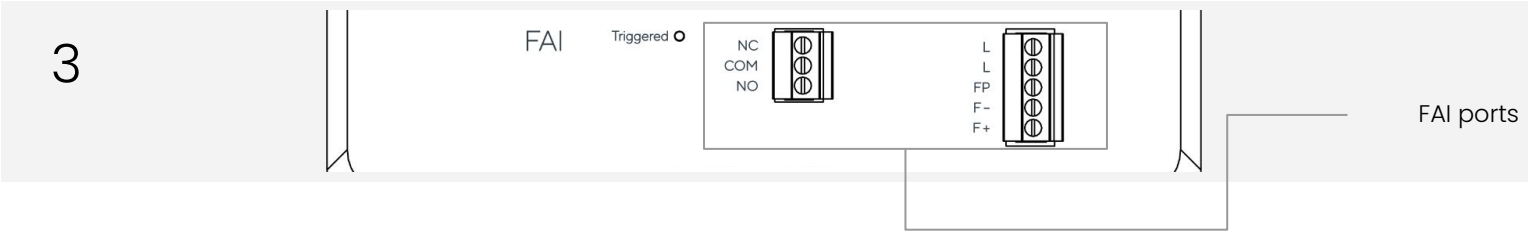

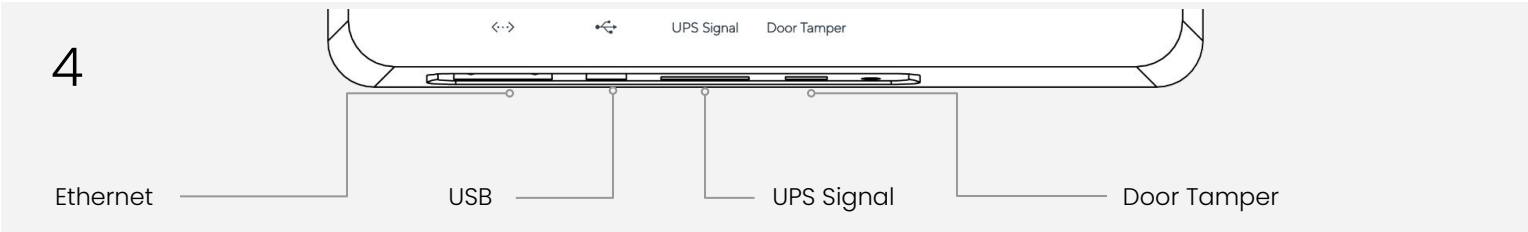

Verkada Inc. 406 E 3rd Ave, San Mateo, CA 94401
sales@verkada.com

All specifications are subject to change without notice
Copyright © 2023 Verkada Inc. All rights reserved.

Recommended Testing

To ensure ongoing functionality of AC42, it is recommended to check the following interfaces every 6 months:

- Short each input to its adjacent GND port and verify that LED illuminates.
- Use multimeter to confirm expected impedance across relay outputs.
  - Closed across NC and COM
  - Open across NO and COM
- Use multimeter to verify correct voltage is supplied at 12V AUX output, Relay Contact outputs, and reader power outputs.
- Check the shielding cables of the readers and other AUX wiring, if any, for proper connection to the grounding screw/s on the chassis.
- If a back-up battery is in use, follow installation, maintenance, and other safety guidelines and recommendations from the battery manufacturer

Verkada Inc. 406 E 3rd Ave, San Mateo, CA 94401
sales@verkada.com
All specifications are subject to change without notice
Copyright © 2023 Verkada Inc. All rights reserved.

AC42 Technical Specifications

Power Consumption	60W maximum	
AC Power Input	100-240VAC 50/60Hz 1.5A maximum	
Inputs	2x REX dry inputs per door 1x DPI dry input per door 2x auxiliary dry inputs	
Readers	1x reader port (Verkada/RS-485 or Wiegand) per door Reader current consumption must be < 250mA per reader *Note: max of 4 readers can be powered simultaneously*	
Relay Outputs	1x wet or dry relay per door Wet relay switch-selectable power: • 12V operation 700mA max • 24V operation 350mA max Dry relay max pass-through power: • 24VDC @ 2A (resistive load) 2x auxiliary dry relays	
AUX Power	1x 12V @ 250mA	
Dimensions	417 x 321 x 116.25mm	
Weight	6.35kg	
Operating Temperature	0°C - 50°C	5 - 90% Humidity
Compliance	FCC Part 15 Class A, ICES-3 Class A, CE, UKCA, RCM, VCCI, UL 294, CAN/ULC 60839-11-1, UL 62368-1, CSA C22.2 No. 62368-1, IEC 62368-1, NDAA	
Connectivity	Ethernet: 10/100Mbps RJ-45 for network connection USB 2.0	
Included Accessories	Lock key and flat head screwdriver	
Mounting Options	Mounting plate and 4 wood screws	

Verkada Inc. 406 E 3rd Ave, San Mateo, CA 94401
sales@verkada.com

All specifications are subject to change without notice
Copyright © 2023 Verkada Inc. All rights reserved.

Mounting 1/4

Use the paper mounting template from the hardware box to get a sense of the wall space AC42 will occupy.

Use the mounting template to drill pilot holes for the mount plate.

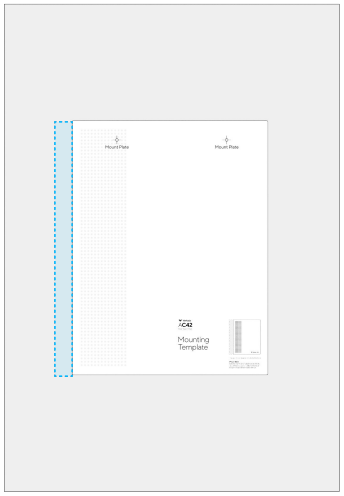

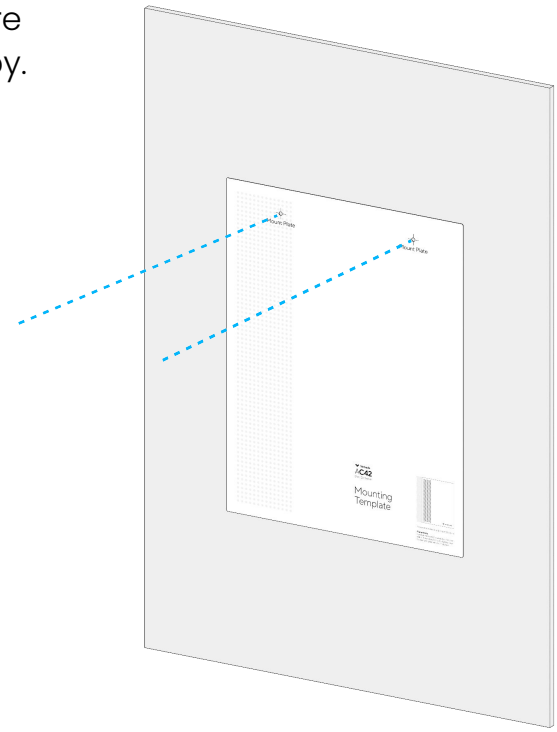

Please Note Leave at minimum 2" clearance on the left side of the enclosure in order for the door to open and close without hindrance.

Use the supplied screws to install the mount plate onto the wall.

Once attached, the enclosure will extend down roughly 16" (~40cm), from the top of the mount plate.

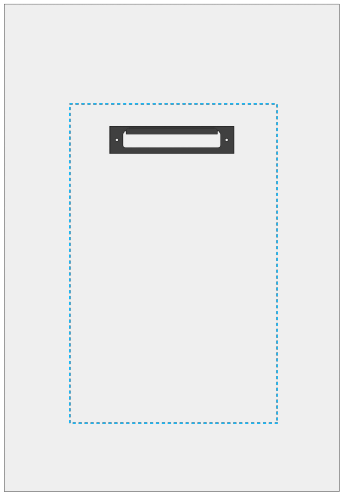

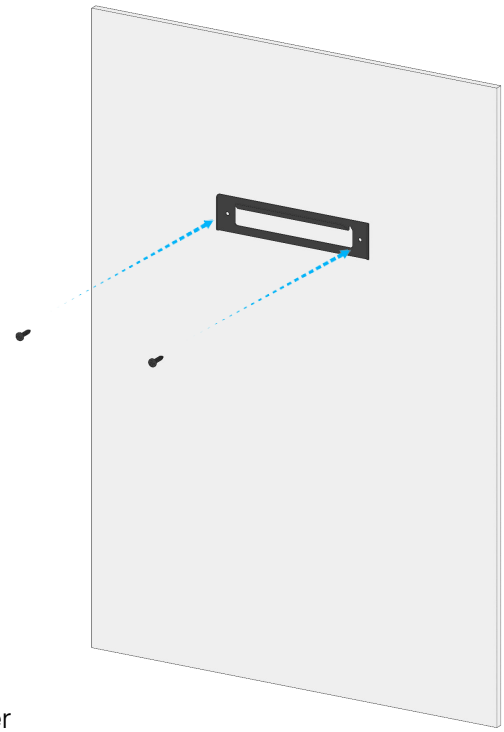

Please Note The supplied screws are intended for plywood installations. For other wall materials, ensure proper load-bearing fasteners are used.

Verkada Inc. 406 E 3rd Ave, San Mateo, CA 94401
sales@verkada.com

All specifications are subject to change without notice
Copyright © 2023 Verkada Inc. All rights reserved.

Mounting 2/4

Unlock and open the enclosure door with the supplied key. Remove the protective cardboard from the inside of the door.

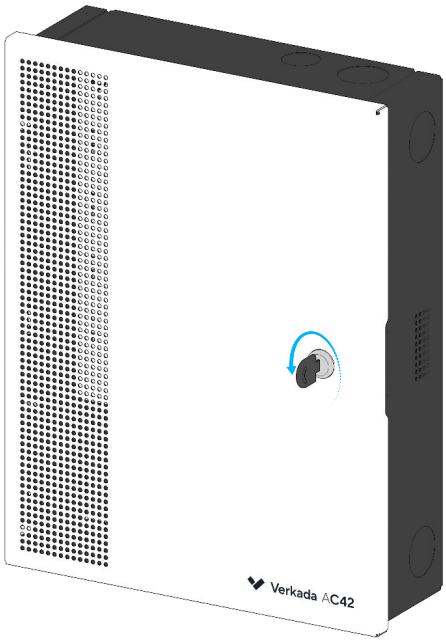

Remove the door by sliding it upwards.

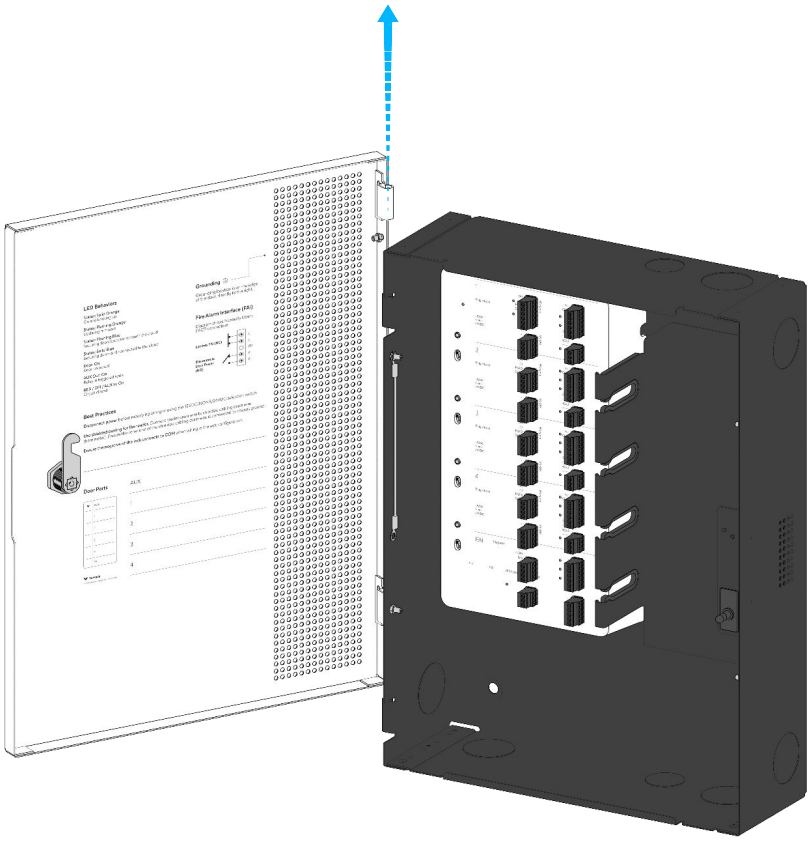

Verkada Inc. 406 E 3rd Ave, San Mateo, CA 94401
sales@verkada.com

All specifications are subject to change without notice
Copyright © 2023 Verkada Inc. All rights reserved.

Mounting 3/4

Carefully slot the enclosure onto the mount plate.

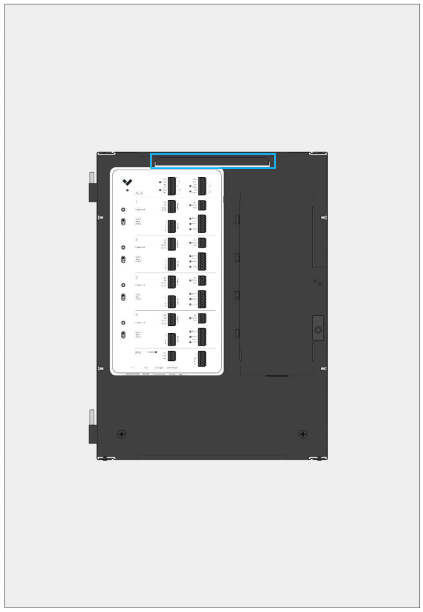

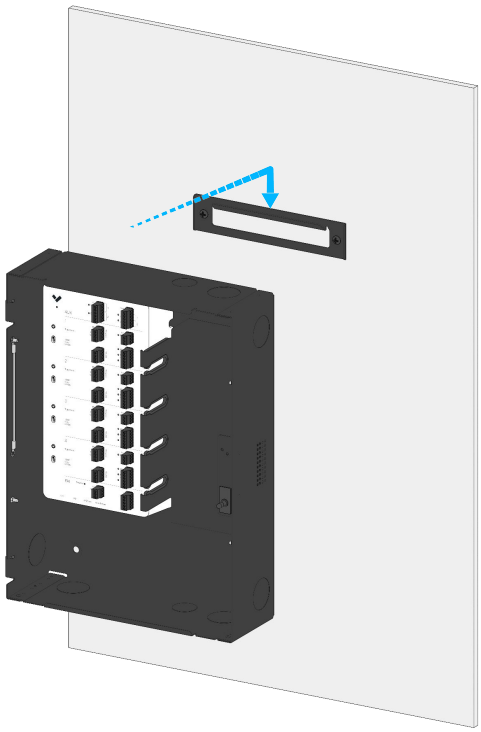

Secure the enclosure onto the wall using the thru holes on the bottom side of the enclosure.

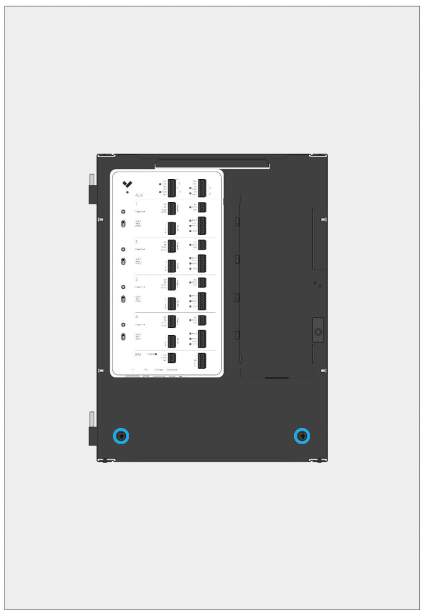

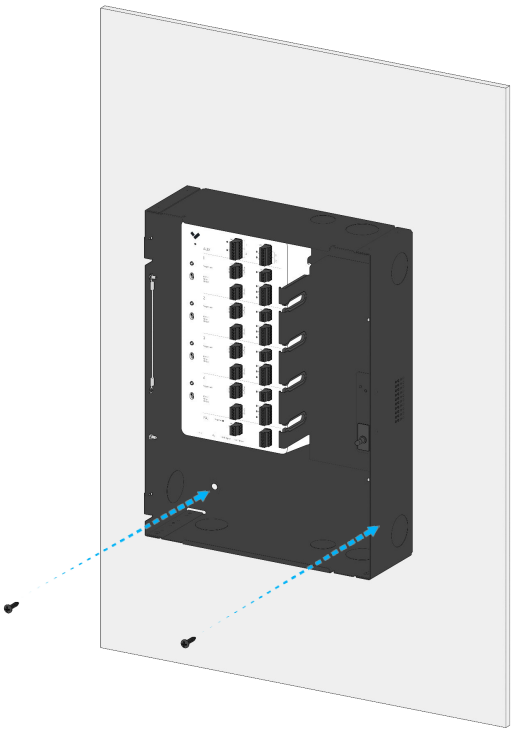

Verkada Inc. 406 E 3rd Ave, San Mateo, CA 94401
sales@verkada.com

All specifications are subject to change without notice
Copyright © 2023 Verkada Inc. All rights reserved.

Mounting 4/4

Reattach the door to the enclosure.

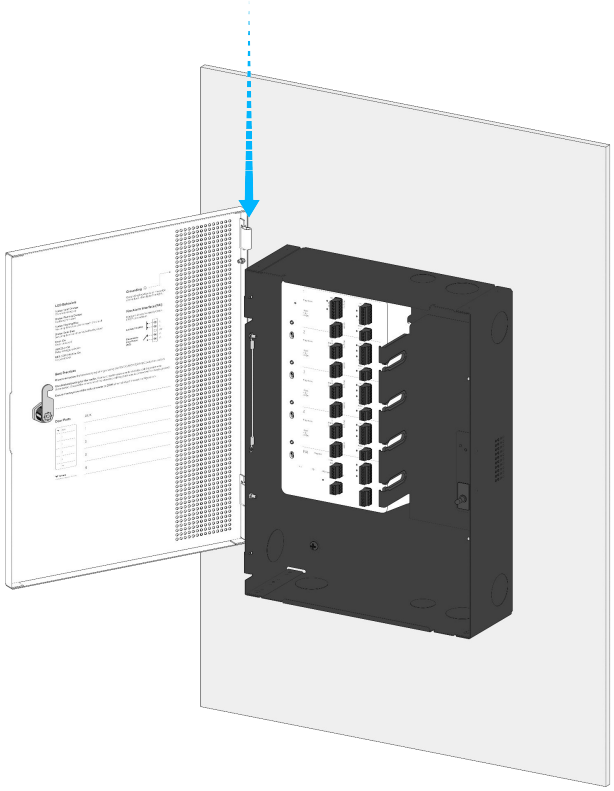

Connect the grounding cable from the enclosure to the door

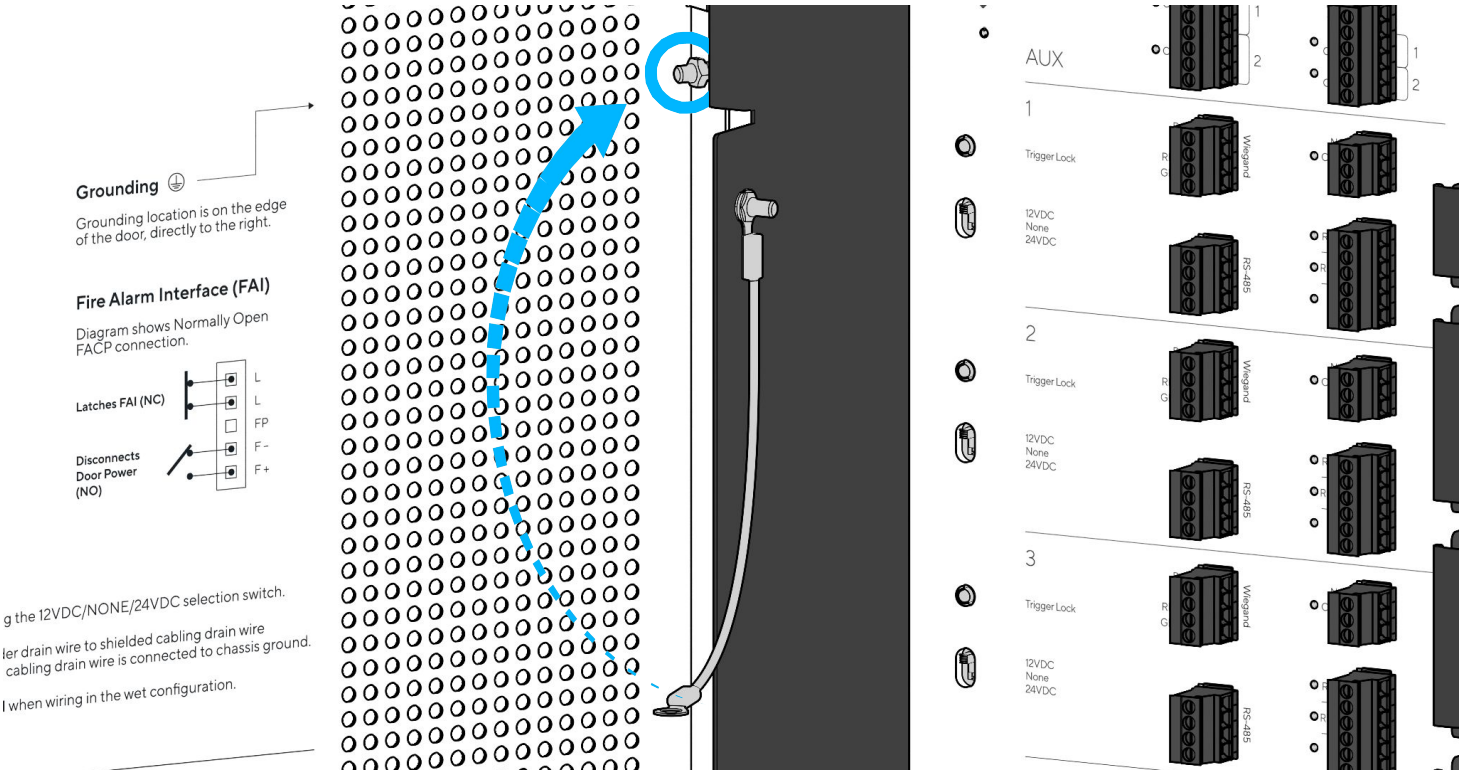

Verkada Inc. 406 E 3rd Ave, San Mateo, CA 94401
sales@verkada.com

All specifications are subject to change without notice
Copyright © 2023 Verkada Inc. All rights reserved.

Recommended Wiring

Verkada AC42 is capable of supporting Verkada Readers over RS-485 and standard Wiegand readers. The following diagram shows the wire types that are recommended for use with the Verkada AC42.

Signal	AWG	Twisted Pair	Conductor	Shielded	Max Length
Reader Option 1 (22 AWG)	22	Yes		Yes	250 ft
Reader Option 2 (20 AWG)	20	Yes		Yes	300 ft
Reader Option 3 (18 AWG)	18	Yes		Yes	500 ft
Power (22 Gauge)	22		Yes	Yes	600 ft
Power (18 Gauge)	18		Yes	Yes	1500 ft
Request-to-Exit	22/18		Yes	Yes	1500 ft
Door Contact	22		Yes	Yes	1500 ft

We recommend using one twisted pair for power (+/-) and one twisted pair for the data (D0/D1 or A/B).

Wiring methods shall be in accordance with National Electrical Code, ANSI/NFPA 70.

Shield Wiring and Grounding

You must use shield wiring with the AC42, particularly for the card reader:

- Connect the drain wire (bare metal) from the reader cable bundle to the drain wire in the shielded cabling. Then, connect the drain wire at the other end of the shielded cabling to Earth ground.
- Improper grounding and shielding may result in unintended product behavior.

It is recommend to connect one of the chassis grounding screws to the building ground at the installation site.

Required Network Settings

An Ethernet connection with DHCP must be used to connect the AC42 to the Local Area Network (LAN). You also need to configure firewall settings to communicate with the AC42.

- TCP port 443
- UDP port 123 (NTP time synchronization)

Verkada Inc. 406 E 3rd Ave, San Mateo, CA 94401
sales@verkada.com

All specifications are subject to change without notice
Copyright © 2023 Verkada Inc. All rights reserved.

Connecting a Door 1/5

The door ports' Form C relays can be driven dry or wet. AC42 is rated to power **12V locks up to 700mA and 24V locks up to 350mA.**

None/Dry
The AC42 does not provide power to the locking hardware (typically used with external power supplies).

Wet
The AC42 provides 12V or 24V power to the locking hardware.

Warning

Ensure power is disconnected from the AC42 and locking hardware before wiring, removing or inserting readers, locks or any other peripherals.

1. Wiring Fail Secure and Fail Safe Locking Hardware

Fail secure and fail safe are ways of configuring locking hardware:

- **Fail secure** hardware **locks** when power is interrupted. Usually uses NO (Normally Open Configuration)
- **Fail safe** hardware **unlocks** when power is interrupted. Usually uses NC (Normally Closed configuration)

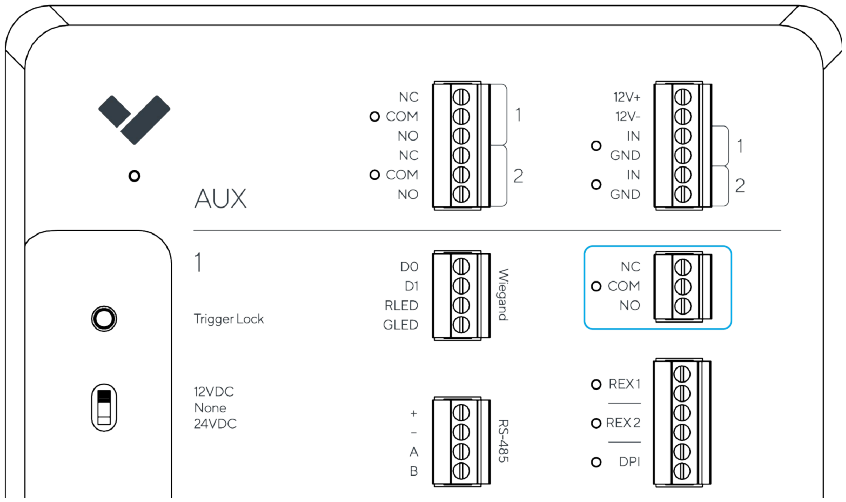

Verkada Inc. 406 E 3rd Ave, San Mateo, CA 94401
sales@verkada.com

All specifications are subject to change without notice
Copyright © 2023 Verkada Inc. All rights reserved.

Connecting a Door 2/5

2a. Connect the Lock (Dry)

When using an external power supply which uses a dry contact, ensure that "NONE" is selected on the door power selection switch.

Fail Secure

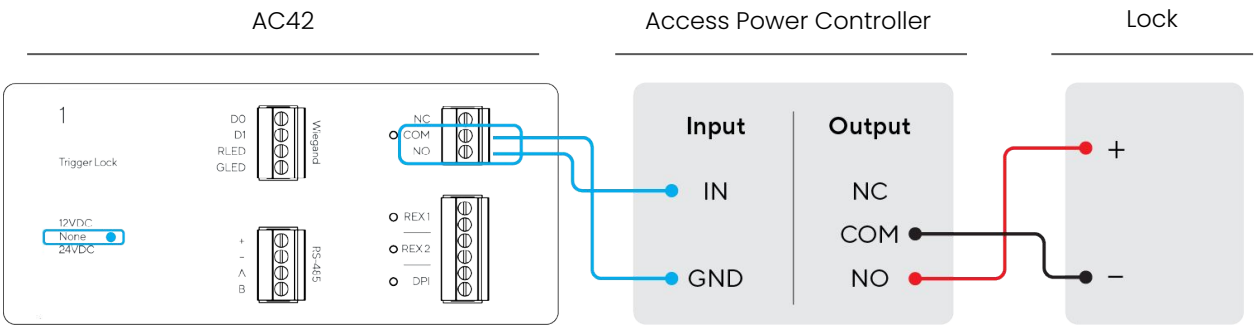

Fail Safe

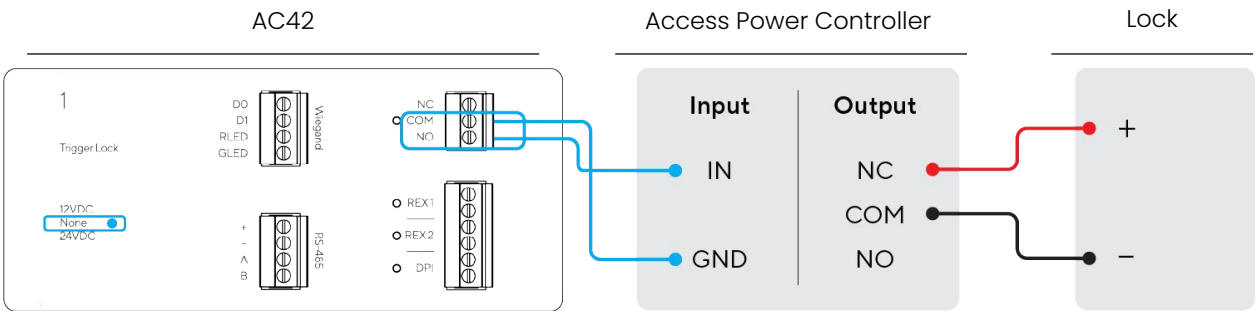

2b. Connect the Lock (Wet)

In a Wet configuration, ensure that power selection for each door is set to the correct voltage as outlined by the locking hardware specifications.

- Set it to "12VDC" for 12 volt locking hardware
- Set it to "24VDC" for 24 volt locking hardware

The AC42 is rated to power:
12V locks up to 700mA and 24V locks up to 350mA.

Warning

When connecting the lock in the WET configuration, ensure the negative of the lock goes into the COM port as shown in the diagrams below.

Fail Safe
LOCK (+) positive goes into NC
LOCK (-) negative and ground wire goes into COM

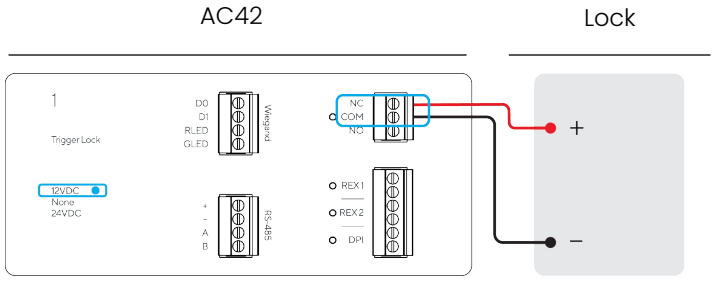

Fail Secure
LOCK (+) positive goes into NO
LOCK (-) negative and ground wire goes into COM

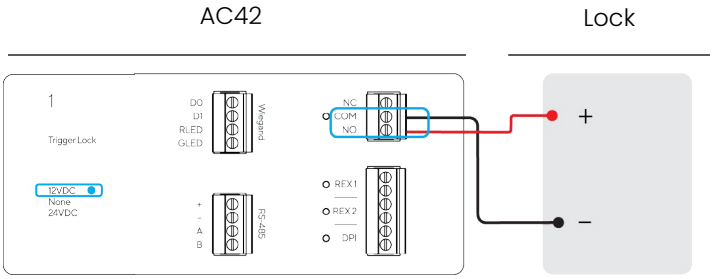

Verkada Inc. 406 E 3rd Ave, San Mateo, CA 94401
sales@verkada.com

All specifications are subject to change without notice
Copyright © 2023 Verkada Inc. All rights reserved.

Connecting a Door 3/5

3. Connecting the Reader

The AC42 is rated to power readers at 12V up to 250mA via the + (VIN) and – (GND) connection. Reader power outputs are fuse protected up to 750mA. Standard Wiegand readers use the top 4-port inputs (powered from + and - of the bottom port) while Verkada/RS-485 readers use the bottom 4-port inputs. The drain wire of the shielded cable should be secured to the nearest AC42 chassis ground.

Verkada/ RS-485 Reader

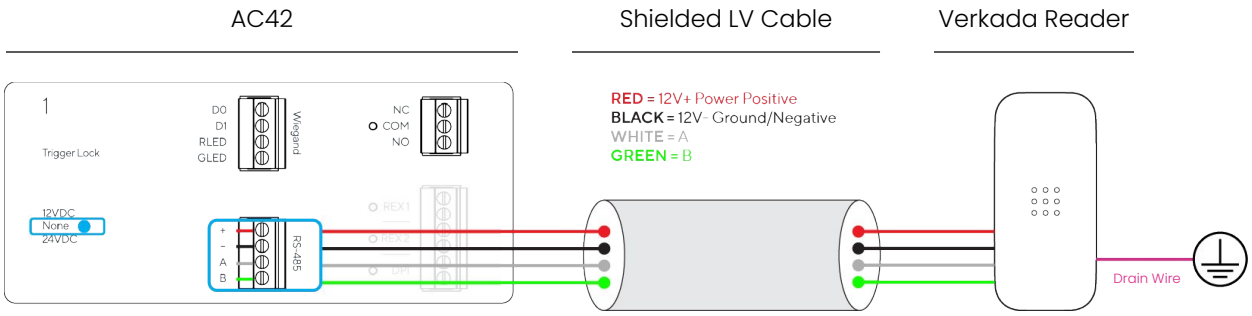

Standard Wiegand Reader

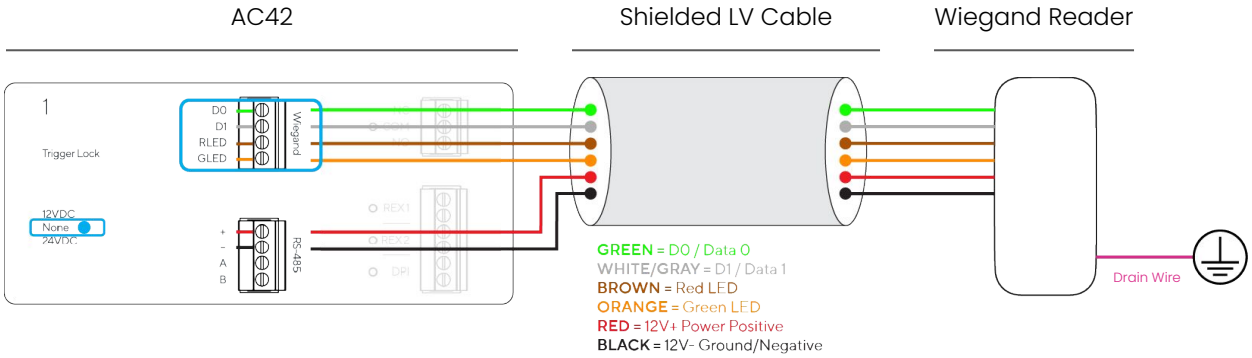

Verkada/RS-485 Reader

Wire Color	Signal
Red	12V Power+
Black	12V Power-
White	A
Green	B

Wiegand Reader

Wire Color	Signal
Red	12V Power+
Black	12V Power-
Green	Data 0
White/Gray	Data 1
Brown	Red LED
Orange	Green LED

Verkada Inc. 406 E 3rd Ave, San Mateo, CA 94401
sales@verkada.com

All specifications are subject to change without notice
Copyright © 2023 Verkada Inc. All rights reserved.

Connecting a Door 4/5

4. Connecting the Inputs

Both the DPI (Door Position Indicator) and the Request-to-Exit (REX) inputs are dry contacts. Installing these inputs is optional. They can be configured in Verkada Command.

Door Position Indicator
Verkada AC42 expects the DPI to be **NORMALLY CLOSED** (NC)

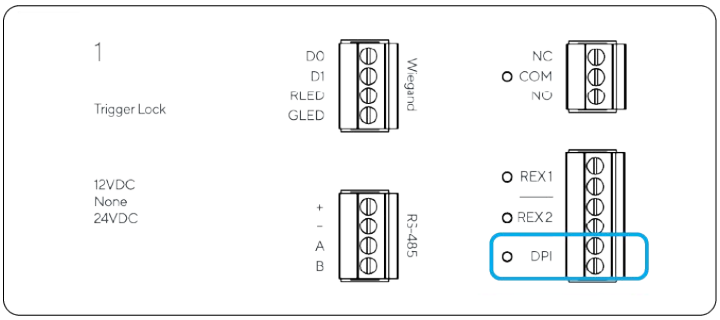

Request-to-Exit (REX)
Verkada AC42 expects the REX to be **NORMALLY OPEN** (NO)

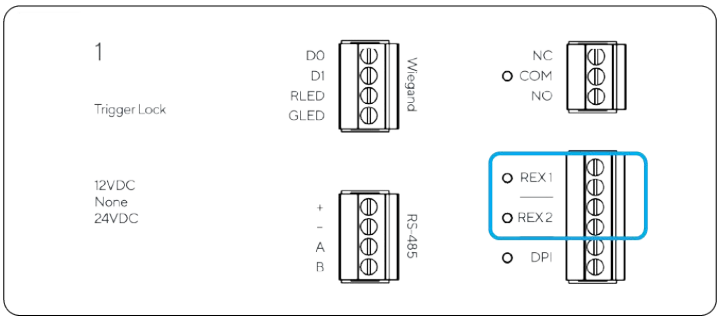

The REX can be configured in Verkada Command to release the lock; this is most commonly seen in electromagnetic locks. The REX unlock time can also be configured.

Verkada Inc. 406 E 3rd Ave, San Mateo, CA 94401
sales@verkada.com

All specifications are subject to change without notice
Copyright © 2023 Verkada Inc. All rights reserved.

Connecting a Door 5/5

5a. Wiring the REX With the Door Strike

For safety-related applications, wire the REX in parallel with the Door Strike. You can wire additional REX switches and sensors to the door cassette if needed.

DRY Configuration

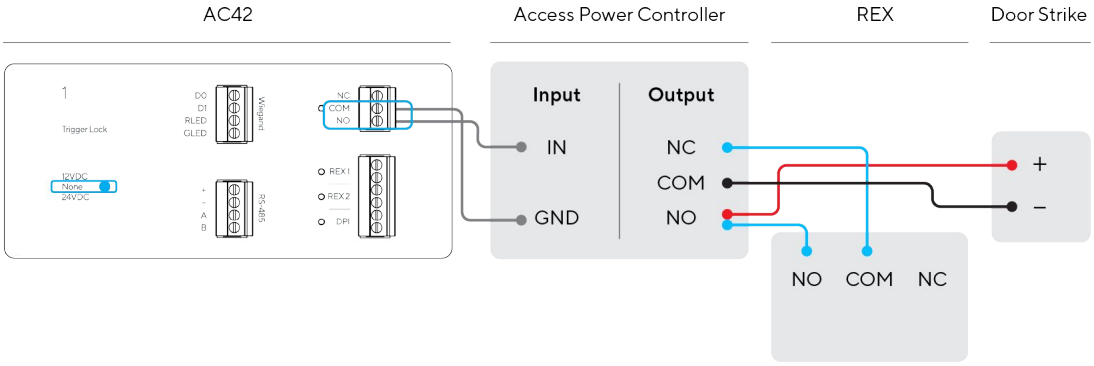

WET Configuration

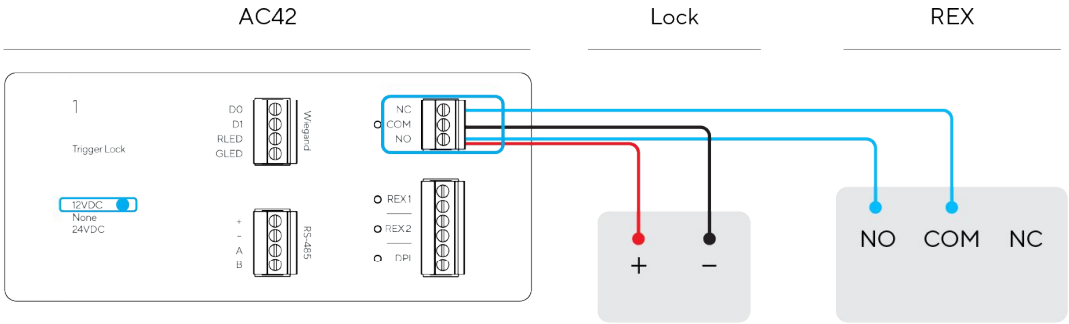

5b. Wiring the REX With an Electromagnetic Lock

For safety-related applications, wire the REX directly to the mag lock. You can wire additional REX switches and sensors to the door cassette if needed.

DRY Configuration

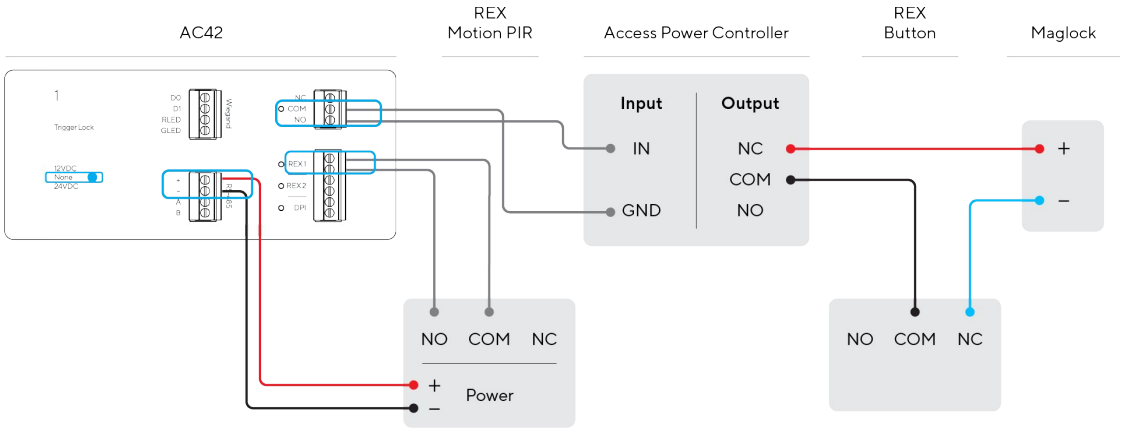

WET Configuration

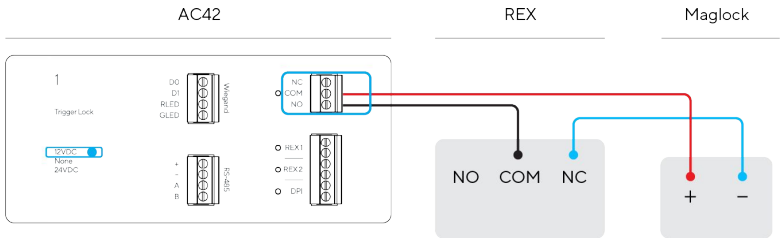

Verkada Inc. 406 E 3rd Ave, San Mateo, CA 94401
sales@verkada.com

All specifications are subject to change without notice
Copyright © 2023 Verkada Inc. All rights reserved.

AUX

AUX Inputs

The Verkada AC42 has two AUX inputs. The AC42 expects by default both AUX inputs to be **NORMALLY OPEN (NO)** however this behaviour can be changed to **NORMALLY CLOSED (NC)** in command

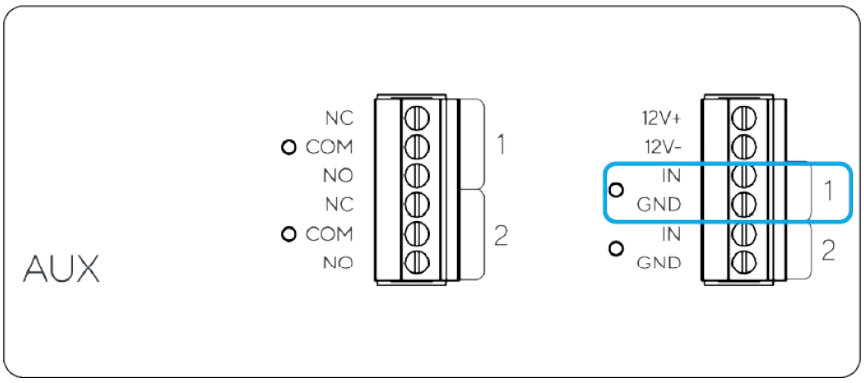

With the AC42's AUX inputs you can hook up devices such as intercoms and panic buttons. All associated events will be logged in Command.

The AUX Inputs can be programmed in Command to initiate a lockdown or unlock a door (or a set of doors). We will be expanding support for more auxiliary devices in the future.

Example AUX 3rd Party Intercom Wiring Diagram

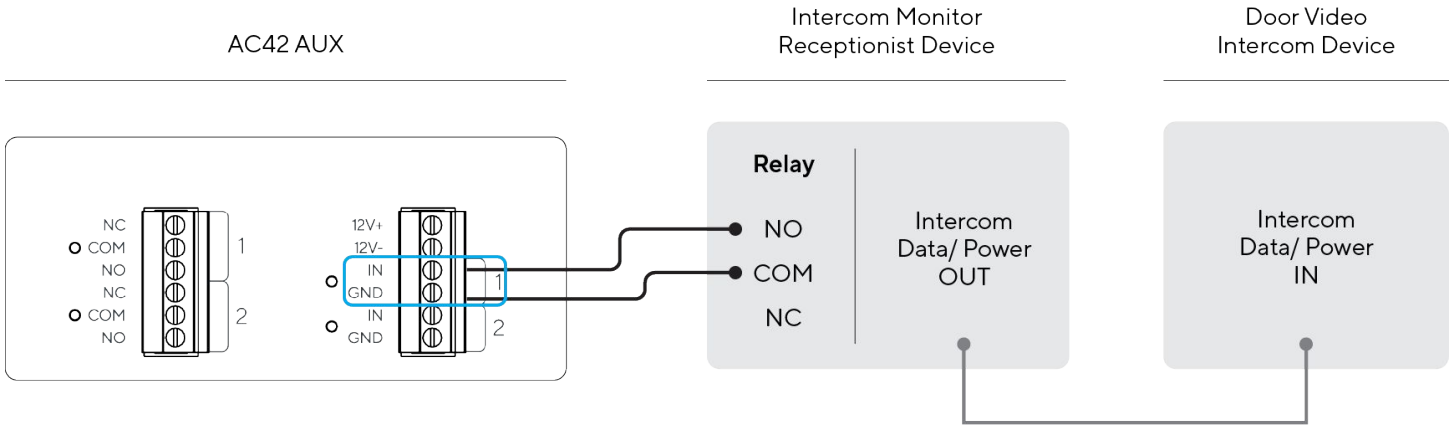

AUX Outputs

Additionally, the AC42 has two AUX Form C relays. These two AUX relays can be programmed to trigger an output during a lockdown. This allows you to activate a dialer, strobe light, sounder, etc. when a lockdown is initiated.

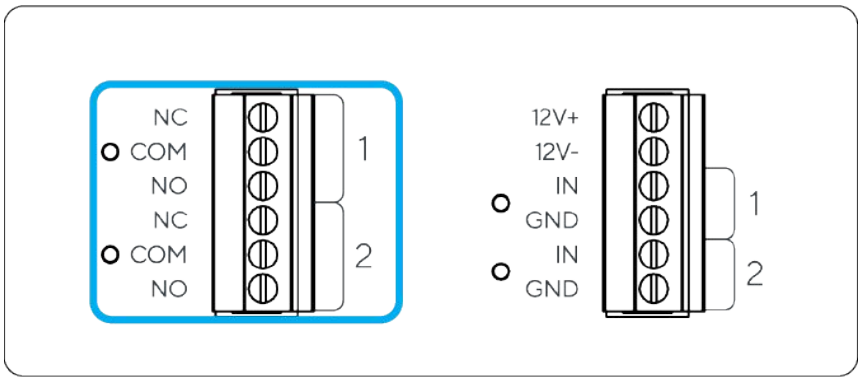

Verkada Inc. 406 E 3rd Ave, San Mateo, CA 94401
sales@verkada.com

All specifications are subject to change without notice
Copyright © 2023 Verkada Inc. All rights reserved.

FAI set up 1/2

Normally Closed Input

A normally closed fire alarm input from an FACP should be wired across FAI- and FAI_P.

A jumper wire must be connected across FAI- and FAI P.

When the contact is open, this activates the FAI in the AC42 which disables 12V/24V power to all 4 relay outputs. In other words all wet locks will be effectively dry while the FAI is triggered.

Important

FAI+ and FAI_P must be locally jumpered in this configuration.

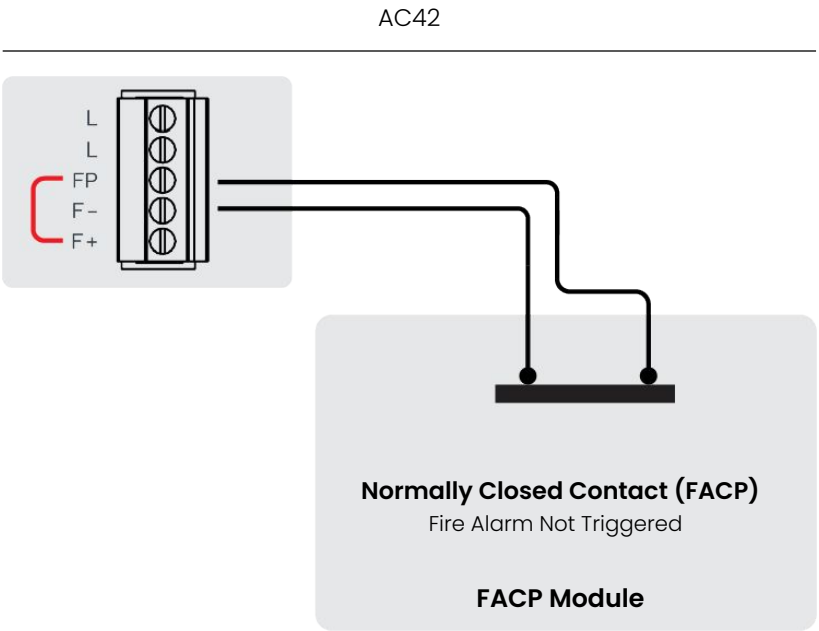

Normally Open Input

A normally open fire alarm input from an FACP should be wired across FAI+ and FAI-.

When the contact is closed, this activates the FAI in the AC42 which disables 12V/24V power to all 4 relay outputs. In other words all wet locks will be effectively dry while the FAI is triggered.

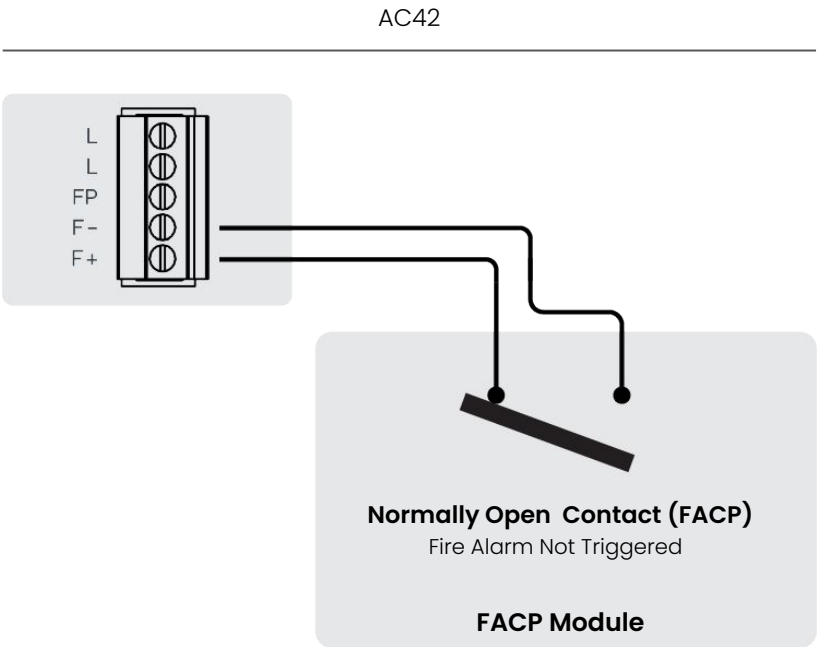

Verkada Inc. 406 E 3rd Ave, San Mateo, CA 94401
sales@verkada.com

All specifications are subject to change without notice
Copyright © 2023 Verkada Inc. All rights reserved.

FAI set up 2/2

Latching

An optional latching input from the FACP may be connected in a normally closed configuration across L and L. When latching is enabled, FAI is active; it will remain active until reset. A reset is achieved if FAI is deactivated and the latching input is temporarily open.

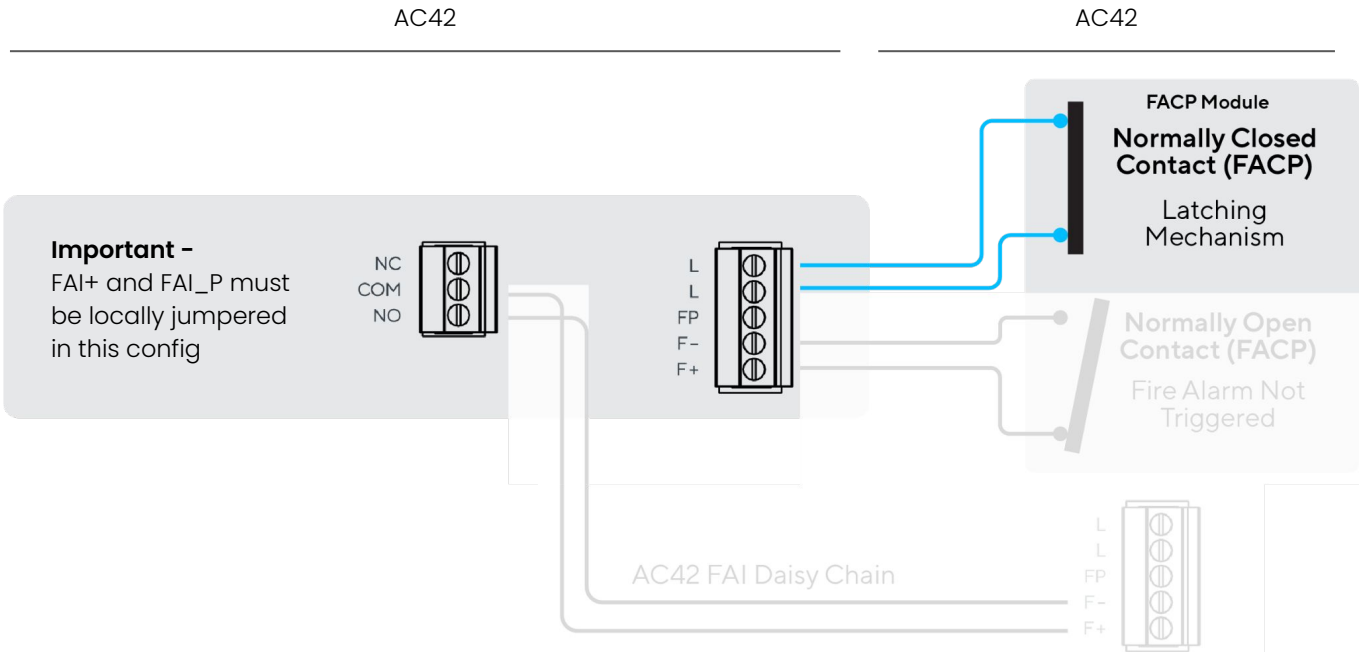

Daisy Chaining

Two AC42 FAI may be daisy chained. The FAI (and latching states) from the primary AC42 will be repeated in the secondary (daisy chained) unit.

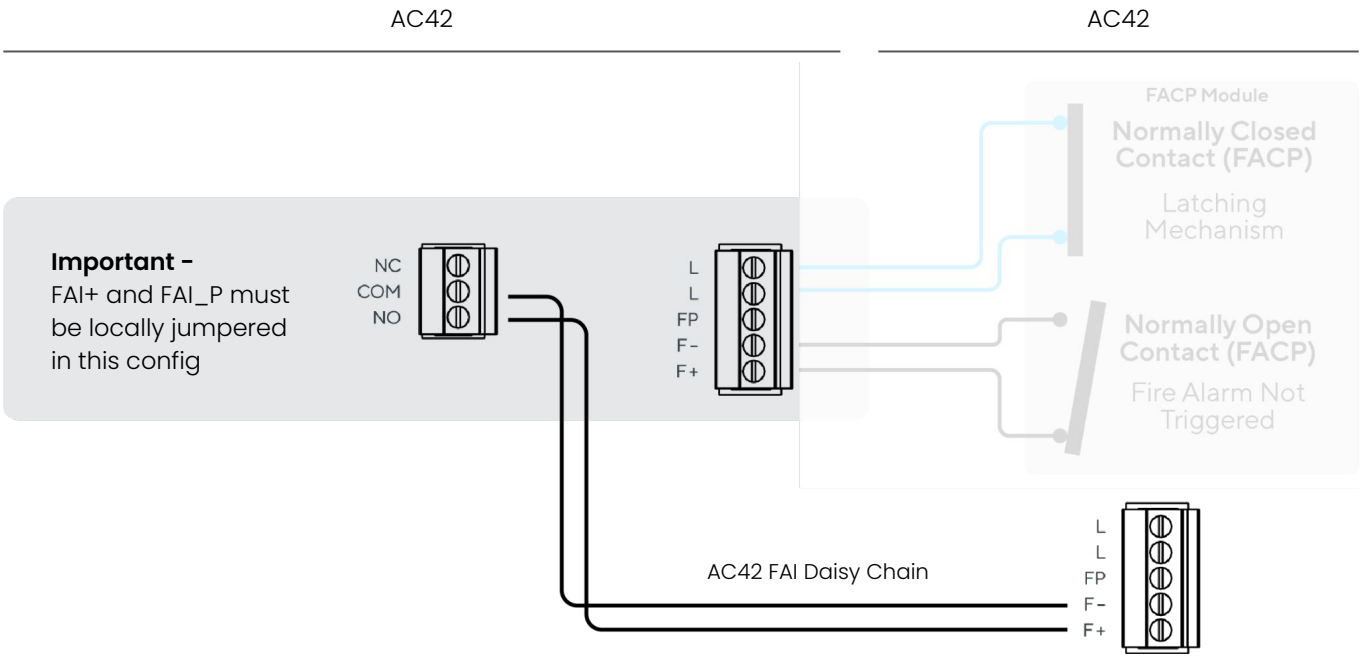

Verkada Inc. 406 E 3rd Ave, San Mateo, CA 94401
sales@verkada.com

All specifications are subject to change without notice
Copyright © 2023 Verkada Inc. All rights reserved.

Connect

Connect the AC42 to your network using the Ethernet port located at the bottom of the controller.

Connect the AC42 power supply to your standard power outlet (100-240VAC).

To add the AC42 to your Verkada Command account, enter the serial number printed on the AC inlet (or the order number) to the “Add Device” page: command.verkada.com/add-device

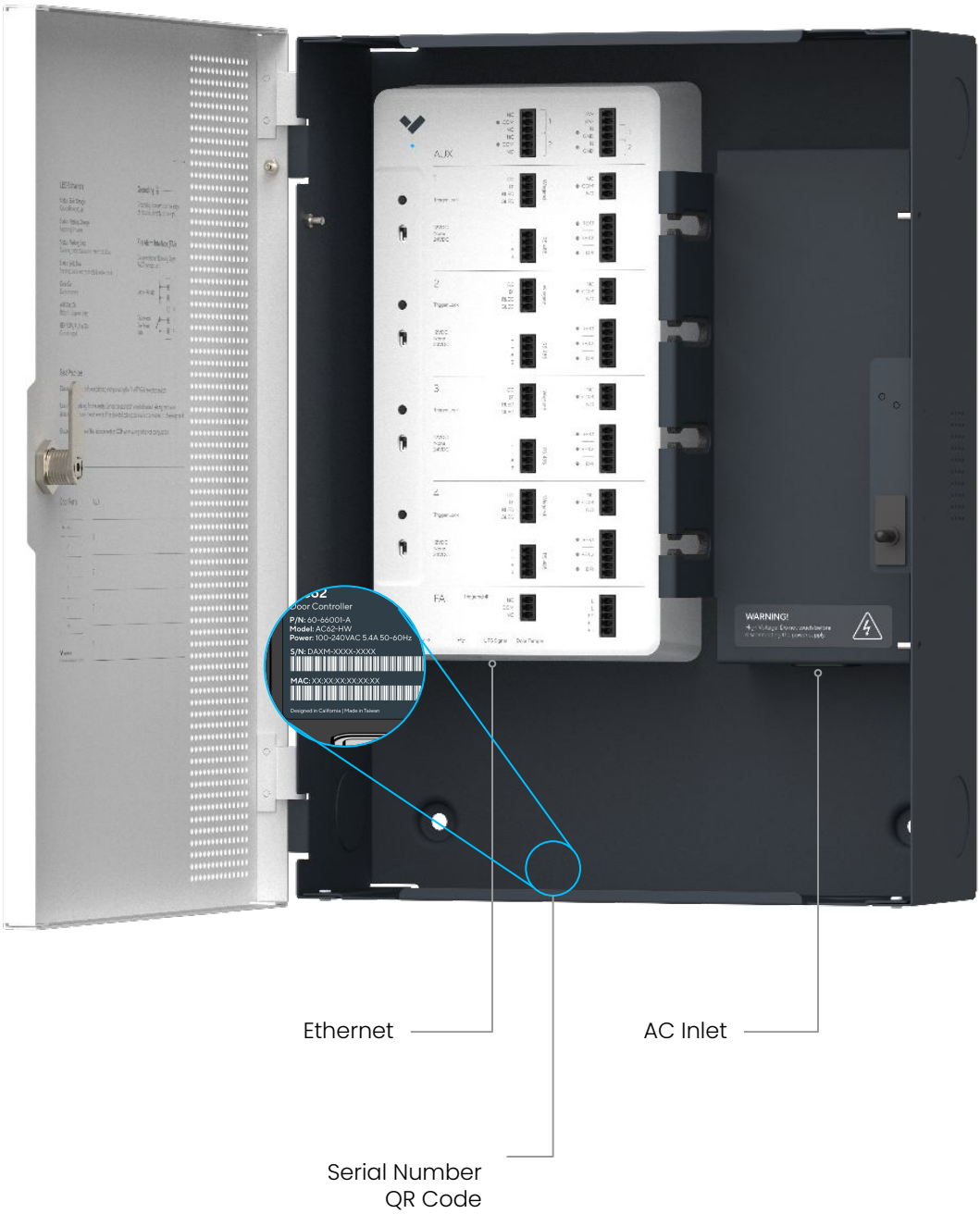

Verkada Inc. 406 E 3rd Ave, San Mateo, CA 94401
sales@verkada.com

All specifications are subject to change without notice
Copyright © 2023 Verkada Inc. All rights reserved.

Battery backup (Optional)

A 12 volt battery can be connected to the female F2 connectors located in the AC42 for backup power. We recommend using a 4.5Ah sealed lead acid rechargeable battery that is UL1989 recognized.

We offer such a battery, ACC-BAT-4AH, which can fit in the bottom of the enclosure. If desired, up to 2 can fit simultaneously.

Only use 12V batteries. If more than one battery is used, they must be wired in parallel.

Important

While connecting the battery leads, be sure to isolate the positive battery terminal (red wire) during installation.

1. Secure the black wire in the AC42 to the negative terminal of the lead acid battery.
2. Secure the red wire in the AC42 to the positive terminal of the lead acid battery.
3. Ensure both the wires are securely connected to their respective battery terminals.

Failure to properly connect the battery may damage the device.

Verkada Inc. 406 E 3rd Ave, San Mateo, CA 94401
sales@verkada.com

All specifications are subject to change without notice
Copyright © 2023 Verkada Inc. All rights reserved.

AC42 Compliance

FCC Statement	This device complies with Part 15 of the FCC Rules. Operation is subject to the following two conditions: (1) This device may not cause harmful interference, and (2) this device must accept any interference received, including interference that may cause undesired operation. This equipment has been tested and found to comply with the limits for a Class A digital device, pursuant to part 15 of the FCC Rules. These limits are designed to provide reasonable protection against harmful interference when the equipment is operated in a commercial environment. This equipment generates, uses, and can radiate radio frequency energy and, if not installed and used in accordance with the instruction manual, may cause harmful interference to radio communications. Operation of this equipment in a residential area is likely to cause harmful interference in which case the user will be required to correct the interference at his own expense. **FCC Caution:** Any changes or modifications not expressly approved by the party responsible for compliance could void the user's authority to operate this equipment.
IC Statement	This device complies with ISED's licence-exempt RSSs. Operation is subject to the following two conditions: (1) This device may not cause harmful interference, and (2) this device must accept any interference received, including interference that may cause undesired operation. Le présent appareil est conforme aux CNR d' ISED applicables aux appareils radio exempts de licence. L'exploitation est autorisée aux deux conditions suivantes : (1) le dispositif ne doit pas produire de brouillage préjudiciable, et (2) ce dispositif doit accepter tout brouillage reçu, y compris un brouillage susceptible de provoquer un fonctionnement indésirable.
Note	This equipment is for use in an indoor and a restricted access area.
South Africa Compliance*	ICASA TE-2025/0422 APPROVED

Verkada Inc. 406 E 3rd Ave, San Mateo, CA 94401
sales@verkada.com

All specifications are subject to change without notice
Copyright © 2023 Verkada Inc. All rights reserved.

Support

Thank you for purchasing this Verkada product. If for any reason you're experiencing issues or need assistance, please contact our 24/7 Technical Support Team immediately.

Sincerely,
The Verkada Team
verkada.com/support

Verkada Inc. 406 E 3rd Ave, San Mateo, CA 94401
sales@verkada.com

All specifications are subject to change without notice
Copyright © 2023 Verkada Inc. All rights reserved.