Install Guide

A**X11** IO Controller

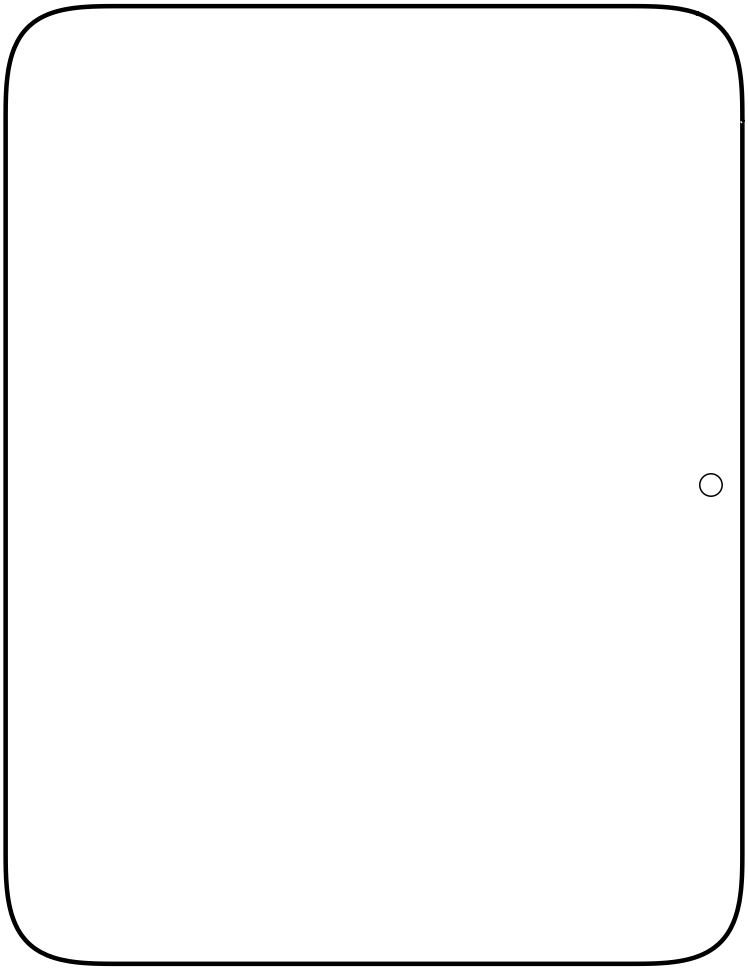

Verkada Inc. 405 E 4th Ave, San Mateo, CA, 94401
sales@verkada.com

All specifications are subject to change without notice.
Copyright © Verkada Inc . All rights reserved.

Document Details

⚠ Note

This equipment has been tested and found to comply with the limits for a Class A digital device, pursuant to part 15 of the FCC rules. These limits are designed to provide reasonable protection against harmful interference when the equipment is operated in a commercial environment.

This equipment generates, uses and can radiate radio frequency energy and, if not installed and used in accordance with the instruction manual, may cause harmful interference to radio communications. Operation of this equipment in a residential area is likely to cause harmful interference in which case the user will be required to correct the interference at his own expense.

This equipment is for use in a restricted access area.

⚠ Warning

Ensure power is disconnected from the AX11 before servicing the product or connecting/disconnecting peripherals.

Document revision

V1.2

Levels of Access Control

- Attack Level/Grade: Level I
- Endurance Level/Grade: Level I
- Line Security Level/Grade: Level I
- Standby Power Level/Grade: Level I

Firmware

Firmware version can be verified and upgraded in the Command dashboard at command.verkada.com.

All specifications are subject to change without notice.
Copyright © Verkada Inc . All rights reserved.

AX11 Overview

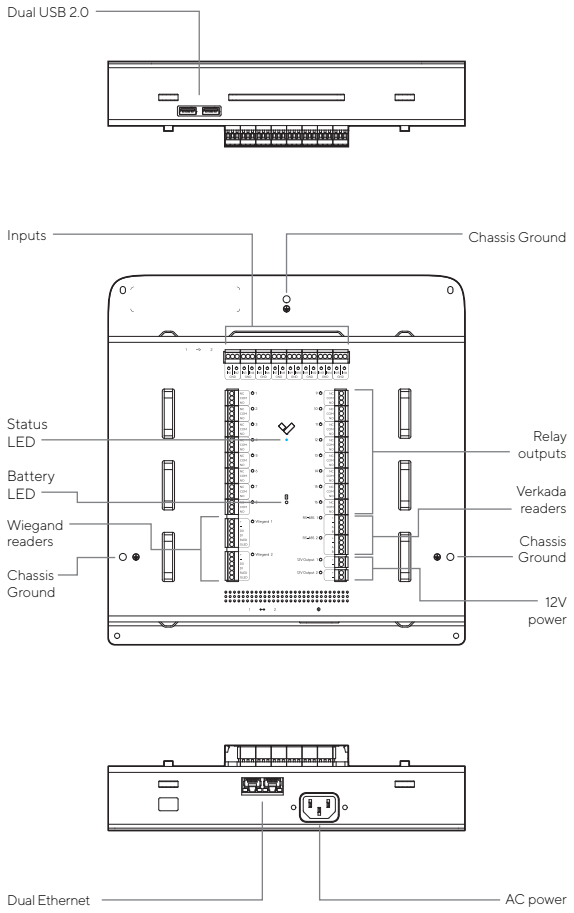

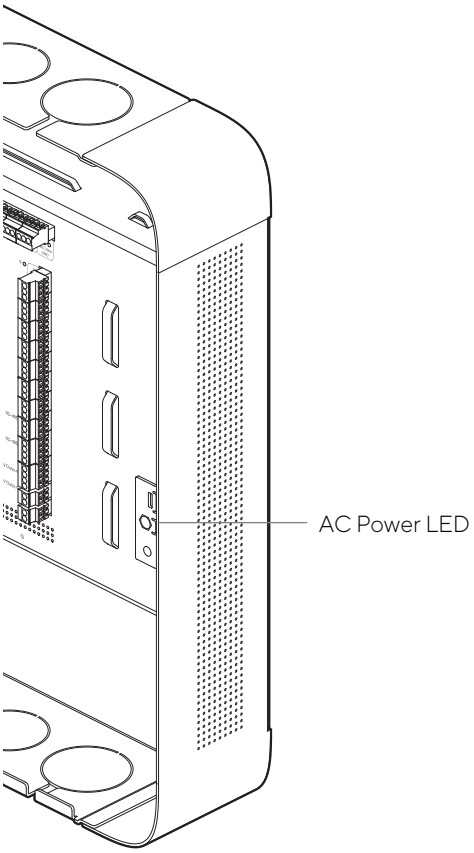

AX11 Recommended Testing

To ensure ongoing functionality of AX11, it is recommended to check the following interfaces every 6 months:

- Short each input to its adjacent COM port and verify LED illuminates
- Use multimeter to confirm expected impedance across relay outputs
  - Short across NC and COM
  - Open across NO and COM
- Use multimeter to verify aux voltage is supplied at 12V outputs

AX11 Status LED Behavior

Solid Orange
Controller is on and booting up

Flashing Orange
Controller is updating firmware

Flashing Blue
Controller is managing inputs and outputs but cannot reach the server

Solid Blue
Controller is managing inputs and outputs and is connected to the server

AX11 AC Power LED Behavior

Solid Green
AC power supplied to controller

All specifications are subject to change without notice.
Copyright © Verkada Inc . All rights reserved.

AX11 Technical Specifications

Power Consumption	60W Max	
AC Power Input	110-240VAC 50-60Hz	
Inputs	16 Dry Inputs Nominal 5VDC	
Relay Outputs	16 Dry Relays 1A/24VDC Contacts	
AUX Power	2 External Outputs 1A/12V Power Each 2A Combined Max	
Dimensions	With Mount 415.6mm (L) x 319.6mm (W) x 111.74 (H)	Without Mount 415.6mm (L) x 319.6mm (W) x 105.74 (H)
Weight	8.3kg	
Operating Temperature	0ºC - 50ºC	5-90% Humidity
Compliance	FCC, CE, UL 294, UL 62368-1/CSA C22.2, CAN/ULC-60839-11-1:2016, NDAA	
Connectivity	Ethernet: 100/1000Mbps RJ-45 cable connector for network connection USB 2.0	
Included Accessories	Quick start guide, Install kit	
Mounting Options	Drywall anchors (M8) and screws (M5)	

Verkada Inc. 405 E 4th Ave, San Mateo, CA, 94401
sales@verkada.com

All specifications are subject to change without notice.
Copyright © Verkada Inc . All rights reserved.

Mounting

To remove the mounting plate, unscrew the two security torx screws from the inside.

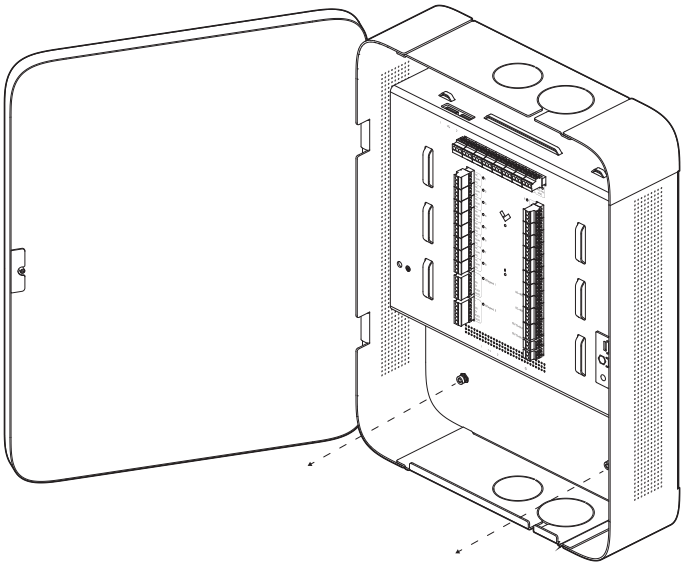

Once the security screws are fully removed, slide the mounting plate down and away from the main enclosure.

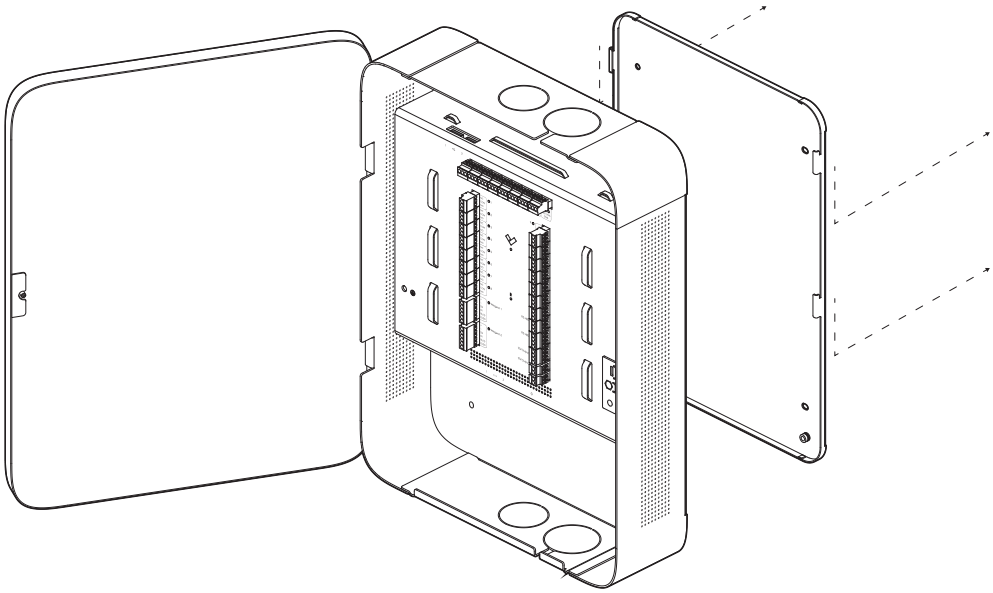

Verkada Inc. 405 E 4th Ave, San Mateo, CA, 94401
sales@verkada.com

All specifications are subject to change without notice.
Copyright © Verkada Inc . All rights reserved.

Mounting

Drill four 5/16" Ø holes into the wall. Insert the drywall anchors into the holes. Fasten the mounting plate onto the wall by installing the mounting screws into the wall anchors.

Drill four 5/32" Ø holes into the wall. Fasten the mounting plate onto the wall by installing the mounting screws into the pilot holes.

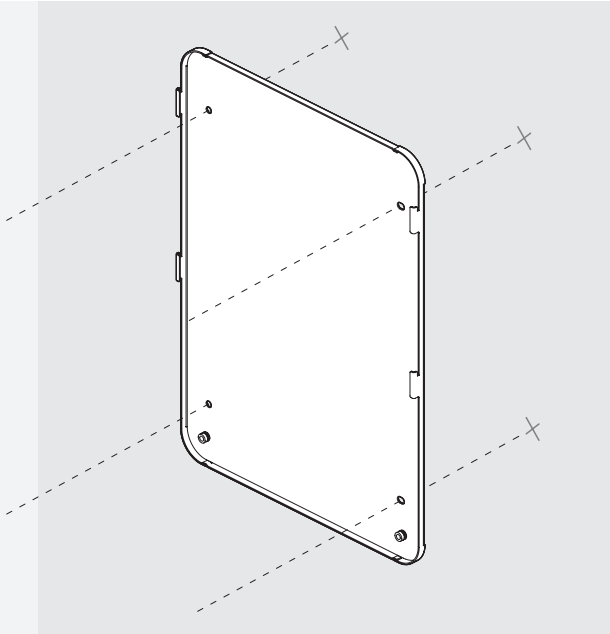

Place the sheet metal enclosure over and onto the mounting plate tabs.

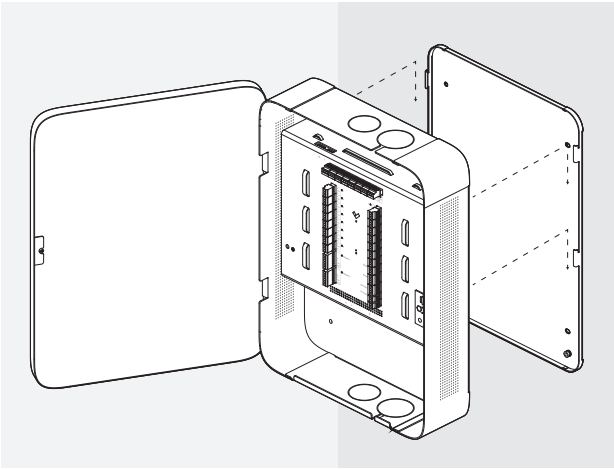

Fasten the two security torx screws to secure the enclosure to the mounting plate.

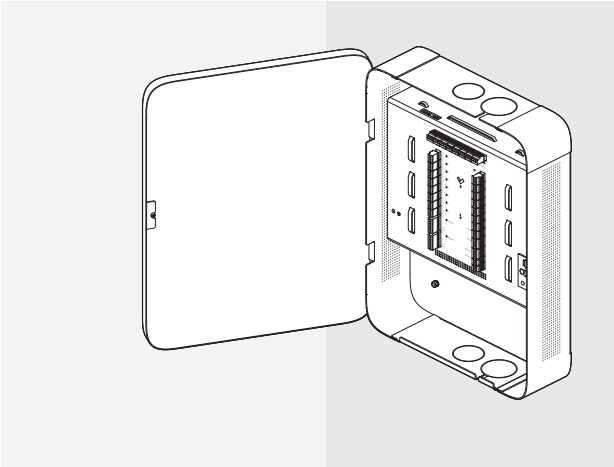

All specifications are subject to change without notice.
Copyright © Verkada Inc . All rights reserved.

Recommended Wiring

The AX11 card reader interface is capable of supporting Verkada Readers over RS-485 and standard Wiegand readers. The following table shows the wire types that are recommended for use with AX11.

Signal	AWG	Twisted Pair	Conductor	Shielded	Max Length
Reader Option 1 (Wiegand or AD31)	22	Yes		Yes	250ft
Reader Option 2 (Wiegand or AD31)	20	Yes		Yes	300ft
Reader Option 3 (Wiegand or AD31)	18	Yes		Yes	500ft
12V Power (22 Gauge)	22		Yes	Yes	600ft
12V Power (18 Gauge)	18		Yes	Yes	1500ft
Inputs	22		Yes	Yes	1000ft
Dry Relay Output	18		Yes	Yes	1500ft

We recommend using one twisted pair for GND and Vin (power) and one twisted pair for the data (D0/D1 or A/B).

Wiring methods shall be in accordance with National Electrical Code, ANSI/NFPA 70.

⚠ Shield Wiring and Grounding

With the AX11, you must use shield wiring.

Drain wire of the cable should be secure to the nearest grounding point, indicated with ⏚ on the controller, with a conductive M4 screw.

Required Network Settings

An Ethernet connection with DHCP must be used to connect the AX11 to the Local Area Network (LAN). You also need to configure firewall settings to communicate with the AX11.

- TCP port 443
- UDP port 123 (NTP time synchronization)

All specifications are subject to change without notice.
Copyright © Verkada Inc . All rights reserved.

Connecting Peripherals

Current Limiting Resistor

If a powered peripheral has inrush current over 10A, an in-line current limiting power resistor of 10Ω should be used to ensure peripheral does not exceed max power draw, which may disrupt normal operation.

Max Line Resistance

The maximum line resistance for input wire runs should be less than 100Ω, exclusive of end-of-line supervision resistors.

12V Power

12V Output terminals support up to 2A combined max.

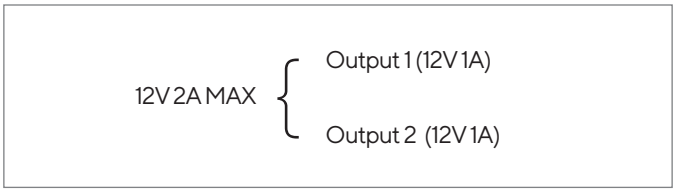

Battery Backup

Battery should be sized to provide at least 4 hours of operation. The AX11 consumes 8.6W with no load (i.e., no inputs, outputs, or readers connected).

AC Field Wiring

If AC power is brought in via conduit, cut and splice wire going from AC inlet to PSU.

Inputs

AX11 has 16 Dry Contact Inputs. Nominal 5VDC. Line resistance should be less than 100Ω exclusive of EOL resistor.

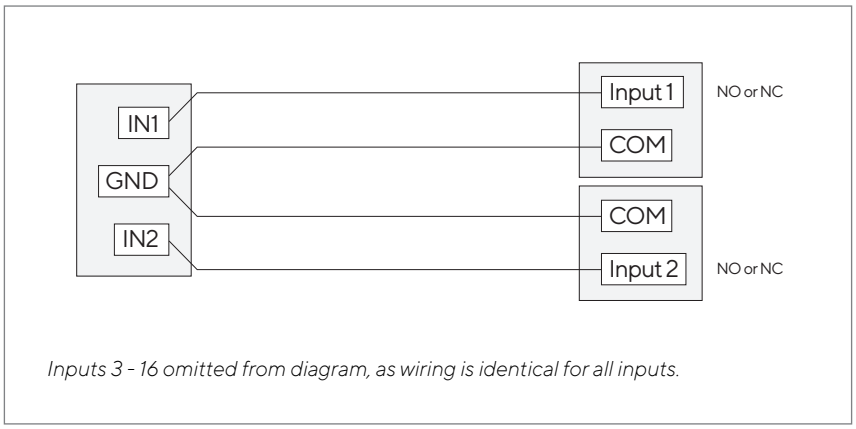

Inputs 3 - 16 omitted from diagram, as wiring is identical for all inputs.

Relay Outputs

AX11 comes equipped with 16 Form C relays that can be driven dry. Max DC load: 24V @ 1A, Max DC current = 1A, Max DC voltage = 60VDC.

All specifications are subject to change without notice.
Copyright © Verkada Inc . All rights reserved.

Connecting an Output

⚠ Warning

Ensure power is disconnected from the AX11 before plugging in or unplugging any of the terminal blocks. Failure to do so may damage the AX11

Wiring a Powered Lock

It is recommended to interface with an Access Power Controller (APC) to provide power to the accessory. If the APC detects the AX11 relay is triggered, it will trigger its own relay.

Fail Secure

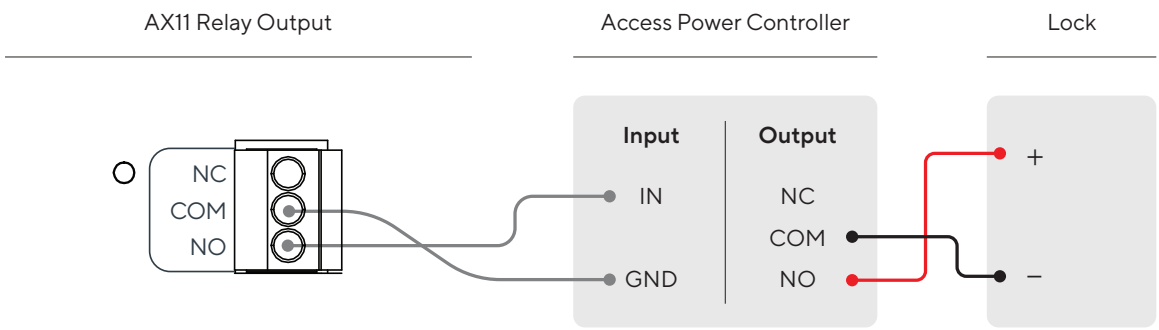

Fail Safe

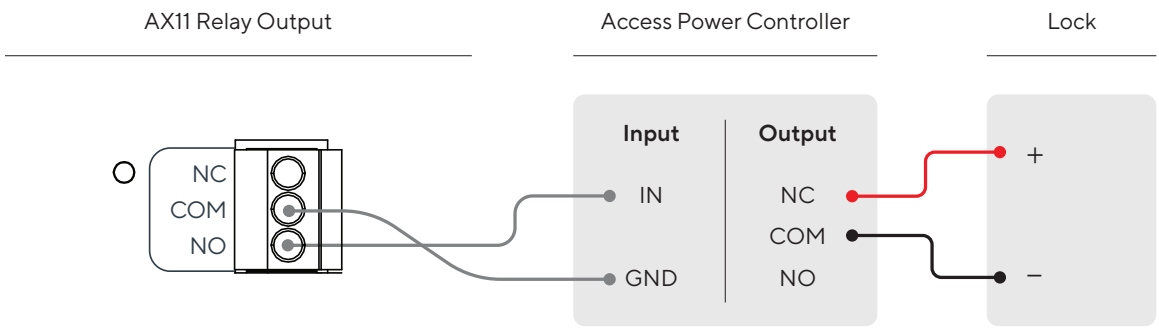

Depending on your APC and lock, your configuration may vary from the above.

Verkada Inc. 405 E 4th Ave, San Mateo, CA, 94401
sales@verkada.com

All specifications are subject to change without notice.
Copyright © Verkada Inc . All rights reserved.

Connecting a Reader

Wiring a Verkada or Wiegand Reader

The AX11 is rated to power readers at 12V up to 250mA via the + Vin and - GND connection. The drain wire of the shielded cable should be secured to nearest AX11 chassis ground.

Verkada Reader

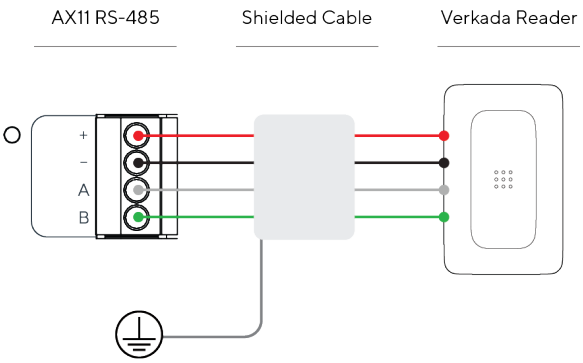

Wiegand Reader

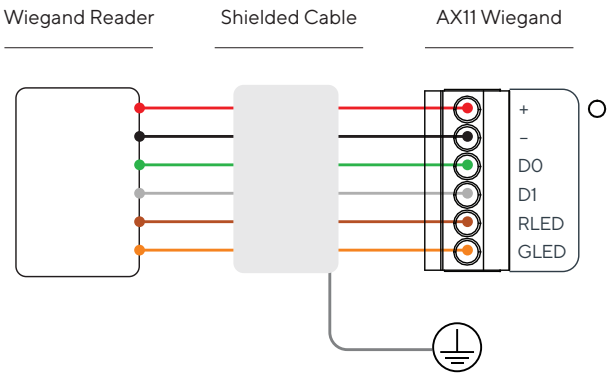

Verkada Reader

Wire Color	Signal
Red	12V Power +
Black	12V Power -
White	A
Green	B

Wiegand Reader

Wire Color	Signal
Red	12V Power +
Black	12V Power -
Green	Data 0
White/Gray	Data 1
Brown	Red LED
Orange	Green LED

All specifications are subject to change without notice.
Copyright © Verkada Inc . All rights reserved.

Battery Backup

Battery Backup

A 12V Battery can be connected to the F2 connectors located at the bottom of the AX11. You can fit one or two batteries at the bottom of the AX11.

We recommend and sell a 12 Volt 4.5 Ah Sealed Lead Acid Rechargeable battery.

If you are using two batteries, ensure they are wired in parallel.

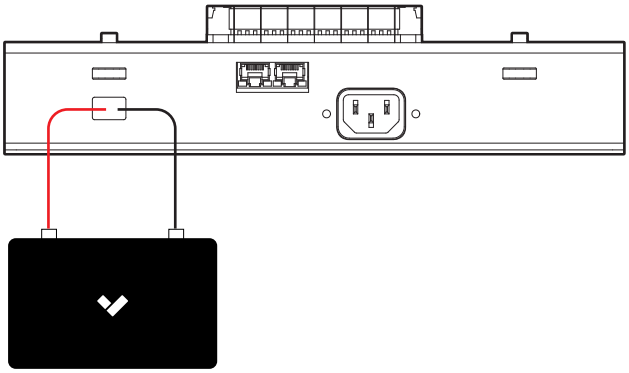

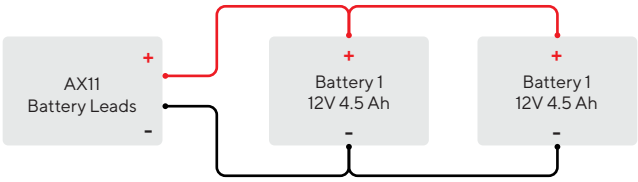

Connect

Connect the AX11 to your network using either of the Ethernet ports located at the bottom of the controller. If you are installing multiple controllers, you can connect up to 4 additional controllers via the spare Ethernet port on each controller.

Connect the AX11 power supply to your standard power outlet (110VAC - 240VAC).

Verkada Inc. 405 E 4th Ave, San Mateo, CA, 94401
sales@verkada.com

All specifications are subject to change without notice.
Copyright © Verkada Inc . All rights reserved.

Appendix

AX11 Compliance

South Africa Compliance*	ICASA TE-2025/0420 APPROVED

Verkada Inc. 405 E 4th Ave, San Mateo, CA, 94401
sales@verkada.com

All specifications are subject to change without notice.
Copyright © Verkada Inc . All rights reserved.

Appendix

Support

Thank you for purchasing this Verkada product.
If for any reason things don't work right, or you need assistance, please contact us immediately.

verkada.com/support
Sincerely, The Verkada Team

Verkada Inc. 405 E 4th Ave, San Mateo, CA, 94401
sales@verkada.com

All specifications are subject to change without notice.
Copyright © Verkada Inc . All rights reserved.