AL54-MS Mortise Lock

Bring Access Control to Every Door

Overview

The AL54-MS Mortise Lock empowers organizations to upgrade traditional lock-and-key systems with a smart, connected solution. With access control across every door, organizations can centrally manage all doors and immediately trigger changes — like initiating lockdowns — with a single click via web or mobile.

All locks can be easily set up right within Verkada Command, requiring no additional software. Admins can receive proactive alerts about low battery status and offline devices. Coupled with over-the-air firmware updates, these features help maximize uptime.

End users can enjoy a seamless unlock experience, using a variety of credentials — including hands-free Bluetooth intent unlock — to access doors, with clear LED feedback to confirm the door's status.

Organizations can choose from three variations with different key cores: conventional, full-size interchangeable, and small format interchangeable.

Key features

Local schedule override

Trigger immediate changes to a door's schedule — like access controlled to unlocked, and unlocked back to access controlled — with a simple button press directly on the lock.

Proactive alerts

Receive proactive alerts for system health issues like offline devices or low battery, and for security events, including when doors are held, forced open. All alerts are customizable by recipient, schedule, and channel.

Long-range wireless connection

Using Verkada's VLink protocol, immediately connect up to 16 locks with the WH32 wireless hub. The hub is wired to a Verkada access controller and can support any lock within a 150 feet radius or up to 2000 feet with a clear line of sight.

Built to last

With a ten-year warranty, UL's three-hour fire rating (pending), and extensive cycle testing, the AL54-MS is a robust solution for a variety of doors and environments.

LF-, HF-, Bluetooth, and NFC support

Unlock doors with a wide array of credentials, from low-frequency proximity cards and high-frequency NFC credentials such as Apple Wallet. A built-in reflective sensor also supports Bluetooth Intent Unlock.

Intuitive interior and exterior LED feedback

Gain instant visual confirmation of a door's status — access granted, access denied, lockdown states, and connectivity status — on either side of the door based on the color and blinking pattern of the LED indicator.

AL54-MS
Tech Specs

Variations

Note: The conventional core SKU will ship with a core and a unique key. The SFIC and FSIC locks will not ship with key cores, but will include a plastic construction key core. See "Compatible Cylinders and Keys" for more information on existing cores which are supported.

AL54-MS-CC-01-26-HW	Mortise Lock, Conventional Core	**AL54-MS-FC-01-26-HW**	Mortise Lock, Full Size Interchangeable Core
AL54-MS-SC-01-26-HW	Mortise Lock, Small Format Interchangeable Core		

General

Dimensions (with handle)	Exterior Assembly: 286.3 x 171.7 x 87.1 mm Interior Assembly: 323.8 x 172.4 x 88.0 mm	**Dimensions (without handle)**	Exterior Assembly: 286.3 x 82.3 x 35.2 mm Interior Assembly: 323.8 x 83.6 x 52.8 mm
Weight	6.8 kg	**Operating Temperature**	-35° to 55°C (–31° to 131°F)
Operating Humidity	5-90%	**Ratings**	IP65, IK08

Mechanical Compatibility

Door Thickness	1-5/8 to 2 inch	**Backset**	2-3/4 inch
Handing	Field Reversible	**Door Position Indicator**	Included in box, needs installation
Lever	Zinc Die Cast, Plated	**Finish**	Satin Chrome Plated
Strike Plate	Included in the box: -9110 with lip 1-15/16" x 4-7/8" -9112 1-1/4" x 4-7/8"	**Latch Bolt Monitor**	–
Compatible Cylinders and Keys	Schlage Conventional Core: 6 Pin Schlage FSIC: 6 Pin, 7 Pin SFIC: 6 Pin, 7 Pin Any key designed for one of the cores listed above is compatible		

AL54-MS
Tech Specs

Power

Power Supply	8xAA L91 lithium batteries (nominal voltage ≥ 1.5V)	**Battery Life**	18 months[1]
Backup Power	Provided via a USB-C cable connected to a 5V power bank	**Voltage Range**	5V to 7.2V
Maximum Current Requirement	1.8A (peak), 5.5 mA (average)		

Connectivity & Communication

System Interface	Wireless communication via VLink protocol to Verkada wireless hub & access controller	**Wireless Frequency Range**	915.0 - 915.7 MHz
Wireless Communication Range	Up to 150 ft with obstructions Up to 2000 ft with clear line of sight	**Audio-visual Communication**	LED Feedback (Interior and Exterior), Buzzer Feedback

Credentials

Credential Technologies	Low Frequency (125 KHz) High Frequency (13.56 MHz) Mobile NFC (13.56MHz) Bluetooth Low Energy (2.4GHz)	**Read Range**	Low Frequency (125 KHz): up to 8cm High Frequency (13.56 MHz): up to 4cm Mobile NFC (13.56MHz): up to 4cm Bluetooth Low Energy (2.4GHz): up to 8cm
Credential Validation Time	<1 second		

Dimensions

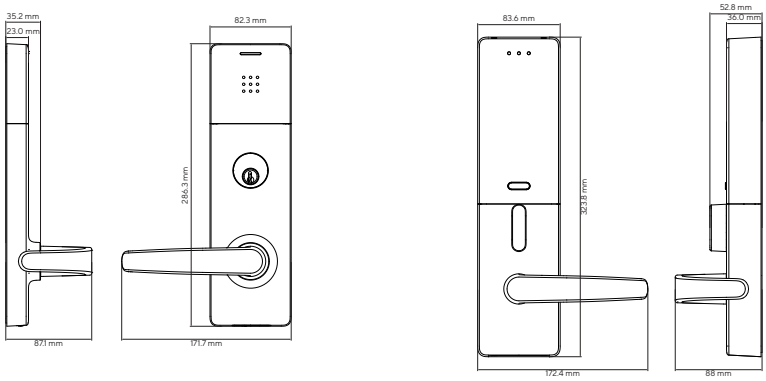

Compliance & Availability

Compliance	FCC, IC, UL10C (pending), UL294 (pending), ULC60389-11-1 (pending), ANSI/BHMA A156.13 Grade 1 (pending), ANSI/BHMA A156.25 (pending)	**Availability**	USA, CAN

1. Battery life depends on the radio environment and usage. The battery life featured on this datasheet has been calculated using the following assumptions: clean radio environment, polling time of 10 seconds, 60 access events per day, and door open events on ingress and egress.

Communication Architecture

Variations

The AL54-MS requires the use of a dedicated AC12 access controller and a WH32 wireless hub to set up the lock. The AL54-MS is not compatible with other controllers or wireless hubs. Each AC12 controller can support up to 16 locks and can connect to 1-4 WH32 wireless hubs. WH32 hubs connect to the AC12 controller via RS485.

There are two primary configurations:

Direct connection (1-2 hubs)	Daisy-chaining (3–4 Hubs)
Organizations can directly connect one or two WH32 hubs to the reader ports on the AC12. In this setup, the hubs must be within 1,500 feet of the AC12.	For configurations requiring three or four hubs, two hubs are connected directly to the AC12 reader ports, and each of these two hubs can then be daisy-chained to one additional hub via RS-485. In this scenario, the hubs must be within 300 feet of the AC12 or any adjacent WH32 hub.

The VLink wireless range between the locks and the hub can vary depending on the environment. In typical indoor environments, the locks must be within 100-150 feet of the WH32 hub. In unobstructed environments with clear line of sight, this range can extend up to 2,000 feet from the hub.

See below for an example set up:

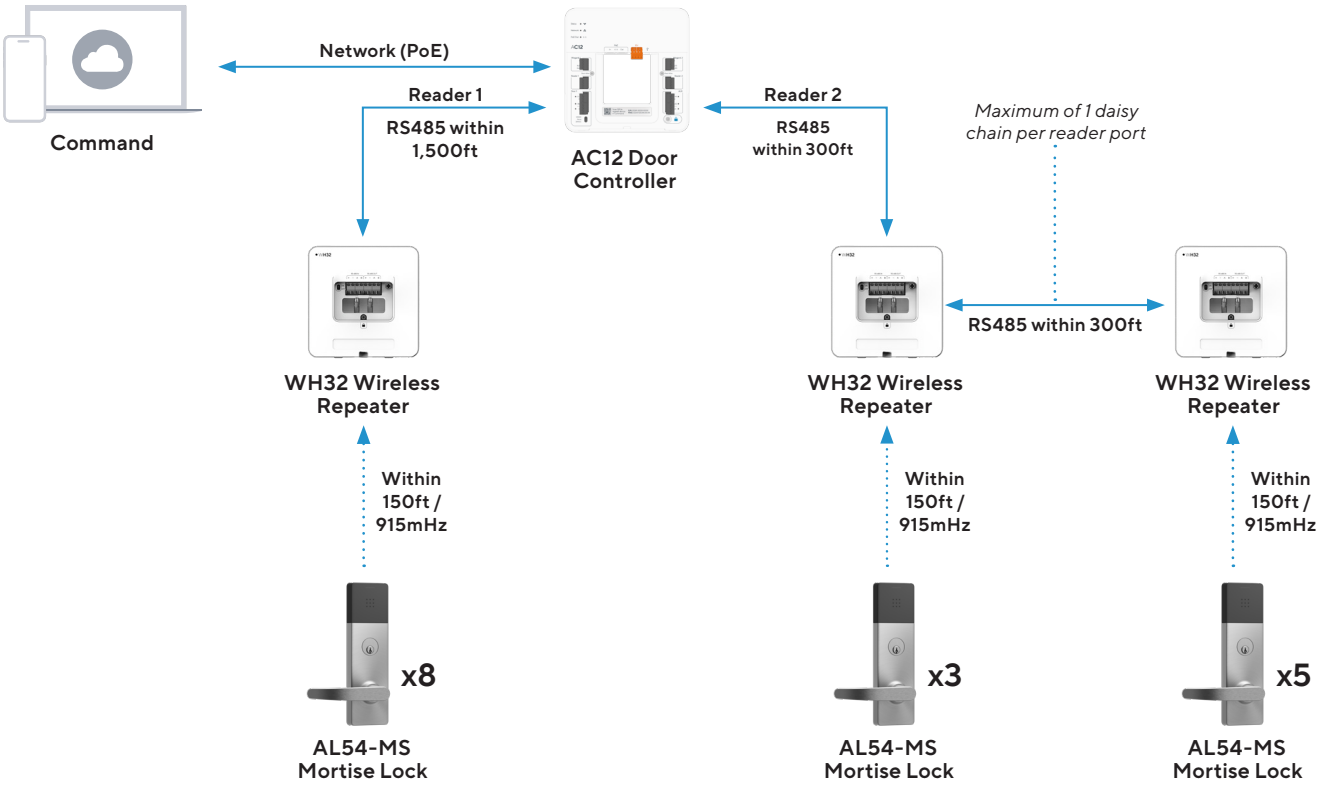

WH32
Tech Specs

Power and network

Power Consumption	0.18W standby, 27W maximum (5mA - 750mA current draw)	**Power Input**	**Hub mode:** 10-36V DC via RS485
Backup Battery (Internal)	1200 mAh 24 hours of backup with typical use		

General

Dimensions	Height: 5.5" (14.0 cm) Width: 5.5" (14.0 cm) Depth: 1.3" (3.4 cm)	**Operating Temperature and Humidity**	32 to 122° F (0 to 50° C) 0-90% RH non-condensing
Tamper Detection	Yes	**Warranty**	10 years
Certifications	FCC, IC, RCM, CE, UL/cUL/IEC 62368-1	**Weight**	1.3 lb (0.6 kg)

Installation

Included Accessories	Mount plate, T10 Security Torx screwdriver, 4x wall screws, 4x wall anchors	**Mounting Options**	Wall or ceiling mount

Ordering Information

Wireless Lock pricing

Model Number	Description	Cost (MSRP) USD
AL54-MS-CC-01-26-HW	AL54 Mortise Lock, Conventional Core	$1,799
AL54-MS-FC-01-26-HW	AL54 Mortise Lock, Full Size Interchangeable Core	$1,799
AL54-MS-SC-01-26-HW	AL54 Mortise Lock, Small Format Interchangeable Core	$1,799

Controller and Hub pricing

Model Number	Description	Cost (MSRP) USD
AC12-HW	AC12 One-Door Controller	$799
WH32-HW	WH32 Wireless Hub	$299

Accessories pricing

Model Number	Description	Cost (MSRP) USD
ACC-RS485-2M	Verkada 2m RS485 Cable	$10
ACC-DR-MS-1	AL54 Mortise Door Reinforcer (2.75" Backset, 1.75" Door Thickness)	$99

Ordering Information

License pricing (New/Capacity Increase)

Model Number	Description	Cost (MSRP) USD
LIC-AC-1Y-CAP	1-Year Door License, Capacity Increase	$249
LIC-AC-3Y-CAP	3-Year Door License, Capacity Increase	$599
LIC-AC-5Y-CAP	5-Year Door License, Capacity Increase	$999
LIC-AC-10Y-CAP	10-Year Door License, Capacity Increase	$1,999

License pricing (Renewal)

Model Number	Description	Cost (MSRP) USD
LIC-AC-1Y-RNW	1-Year Door License, Renewal	$249
LIC-AC-3Y-RNW	3-Year Door License, Renewal	$599
LIC-AC-5Y-RNW	5-Year Door License, Renewal	$999
LIC-AC-10Y-RNW	10-Year Door License, Renewal	$1,999