Motion Feedback for
Autonomous Vehicles and Robots

Whether you're working on Automated Guided Vehicles (AGV), Automated Guided Carts (AGC), Autonomous Mobile Robots (AMR), or any of the other designations being used, Encoder Products Company has the encoders you need to ensure precise, reliable motion feedback.

Forklift-Type AMRs

Lift Control (1)

Get precise, accurate motion feedback to ensure that products and materials get where they need to go, undamaged.

Drive Motor (2)

Get reliable motion feedback to ensure that they remain in designated transit corridors/ areas, and to ensure accurate stopping and starting.

Steering Assembly (3)

Absolute encoders ensure smart positioning, providing exact location in a 360-degree rotation.

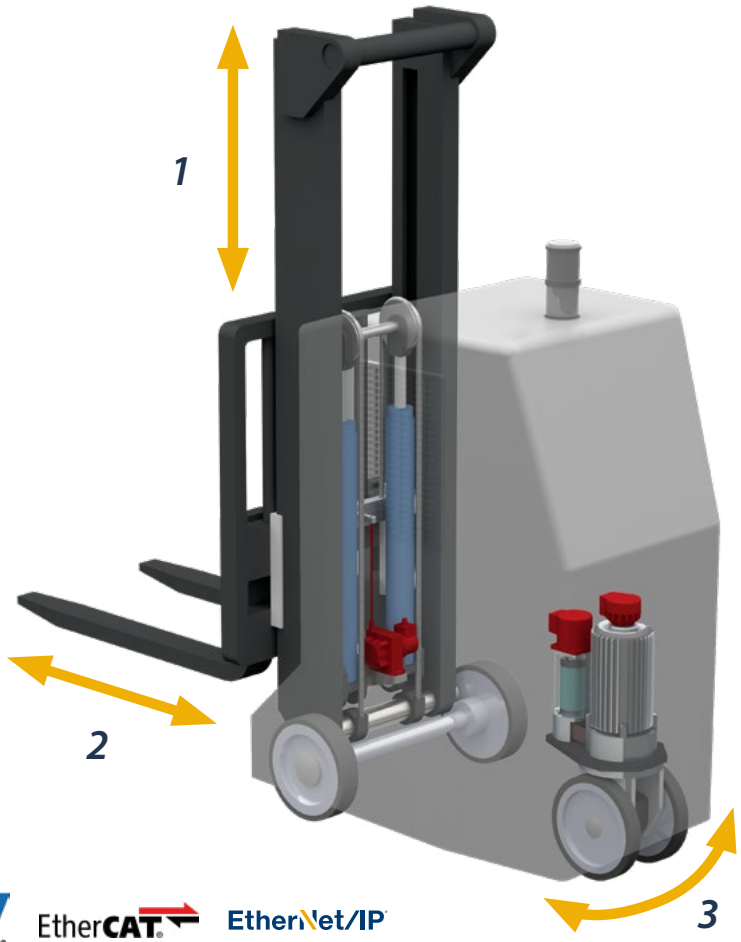

CANopen SAE J1939 BiSS INTERFACE SSI Synchronous Serial Interface EtherCAT EtherNet/IP

ENCODERS TYPICALLY USED ON FORKLIFT-TYPE AUTONOMOUS MOBILE ROBOTS

Model LCX | *Model TR1* | *Model 15T* | *Model 260* | *Model 802S* | *Model A36HB* | *Model A58SB* | *Model A36R*

AGV_BROCHURE_ENCBRO-13_20260609

1.800.366.5412 • 208.263.8541 • *encoder.com* • sales@encoder.com

Motion Feedback for
Automatic Guided Carts (AGCs)

Drive Motor (1)

Motion feedback on drive motors is one of our specialties. We have the compact encoders you need, and the expertise to help you spec the right solution.

Drive Wheel (2)

EPC has the compact encoders you need for your compact AGC drive wheel.

Redundant Encoders (3)

Using two encoders for dual output provides even more reliable motion feedback. ***Ask us how.***

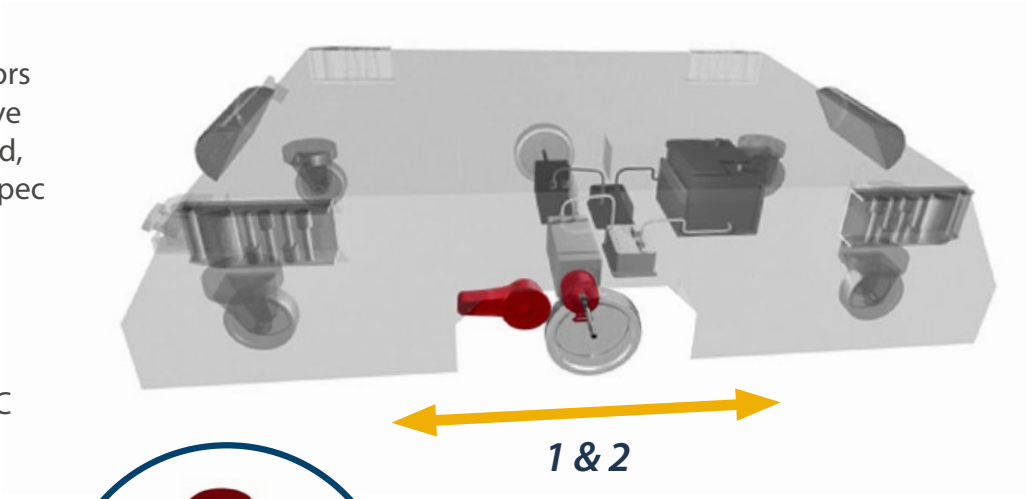

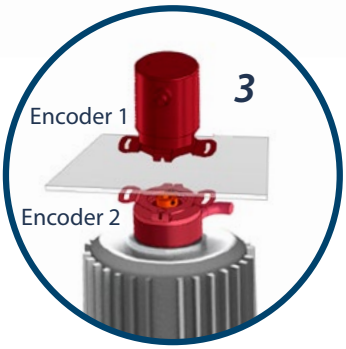

See Encoders in Action!

Omni-directional lift carts make material handling easy.

Encoders on the Job

ENCODERS TYPICALLY USED ON AUTOMATIC GUIDED CARTS

Model TR1

Model 15T

Model 260

Model A36HB

Model A36R

Model A58HB

Learn More

Not sure which motion feedback is right for your application? Give us a call.

When you call EPC, you talk to real engineers and encoder experts who can help you specify the right encoder solution for your motion control application.

AGV_BROCHURE_ENCBRO-13_20260609

1.800.366.5412 • 208.263.8541 • *encoder.com* • sales@encoder.com